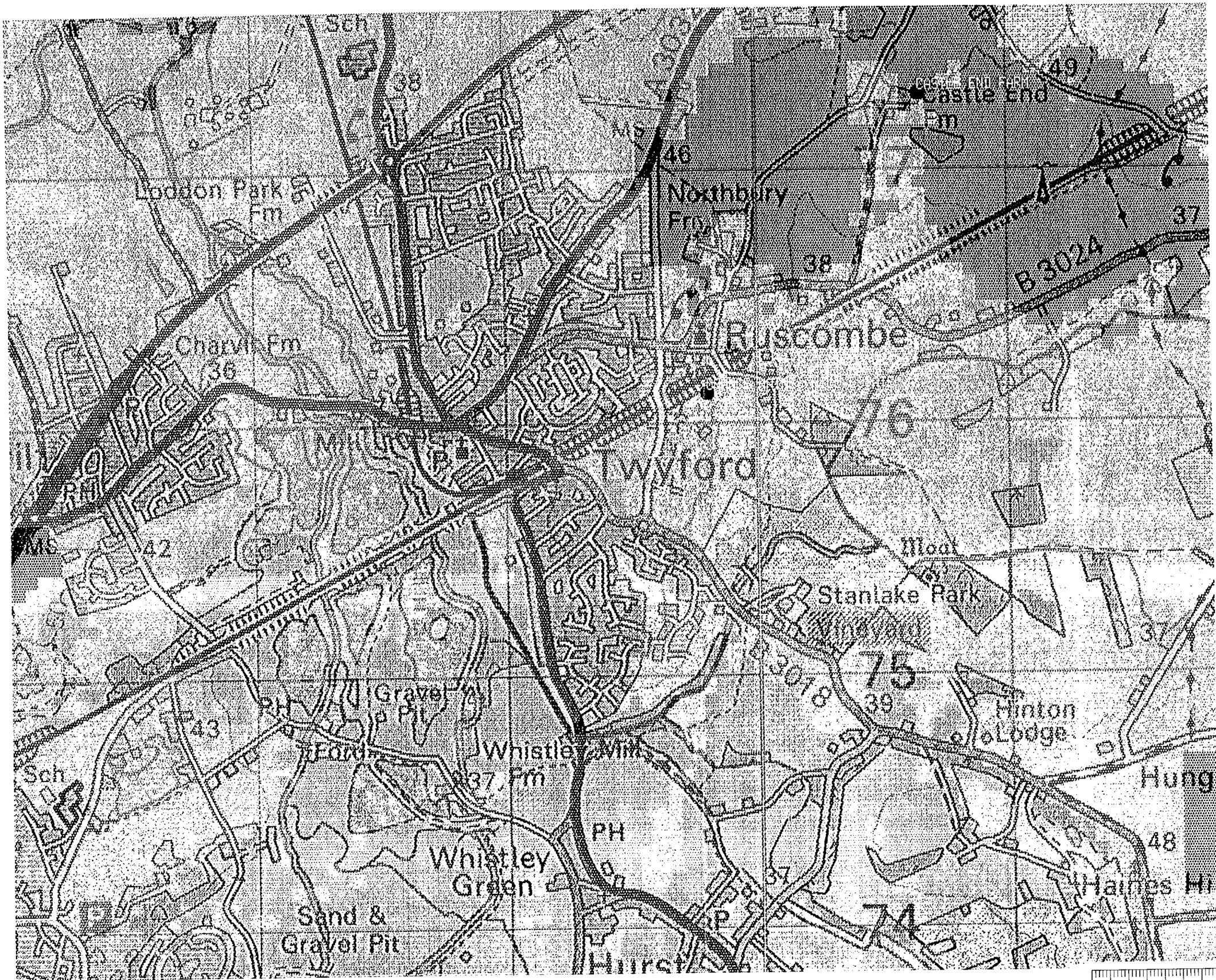

One2One Plot Ref: 4932

98647 Orange Haines Hill Estate

Produced by Nick Hudson
On 11 February 2000

PLOT 1

23.MAY2000* 1568

DELEGATED

REFUSED

Reproduced from the 1997 Ordanance Survey 1:50 000 Scale Landranger map with the permission of The Controller of Her Majesty's Stationary Office, Crown copyright Mercury Personal Communications, Borehamwood, Herts. Licence No. AL 51286A0001

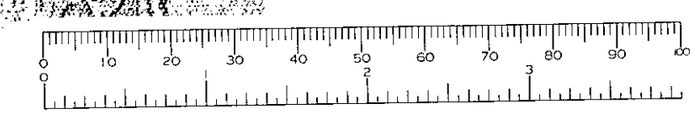

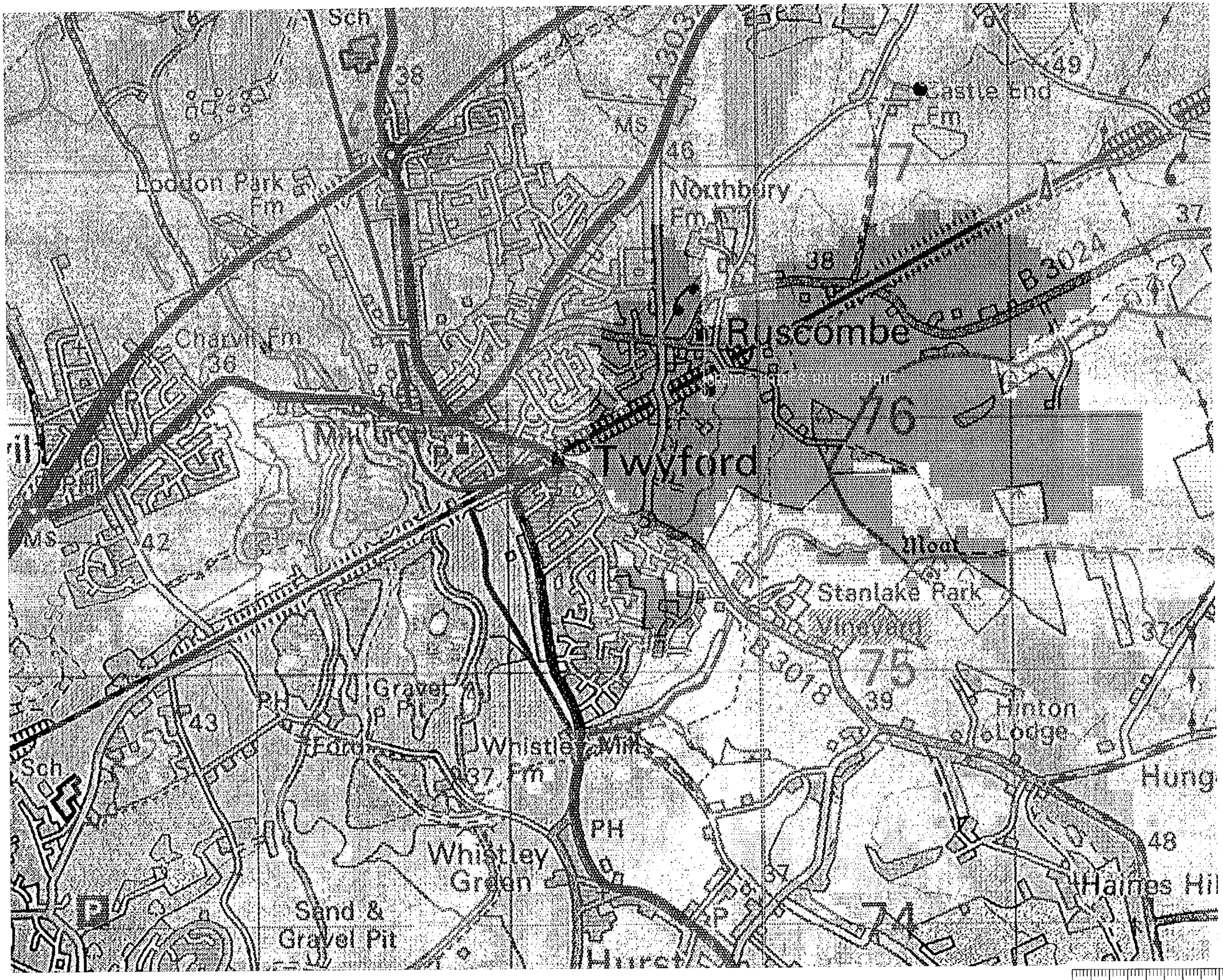

One2One Plot Ref: 4935

98647 Orange Haines Hill Estate

Coverage from Orange Site

Produced by Nick Hudson
On 11 February 2000

PLOT 3

23.MAY2000* 1568

DELEGATED

REFUSED

Reproduced from the 1997 Ordnance Survey 1:50 000 Scale Landranger map with the permission of The Controller of Her Majesty's Stationary Office, Crown copyright Mercury Personal Communications, Borehamwood, Herts, Licence No. AL 51286A0001

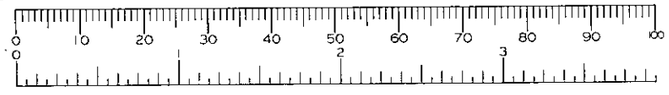

BRK0029

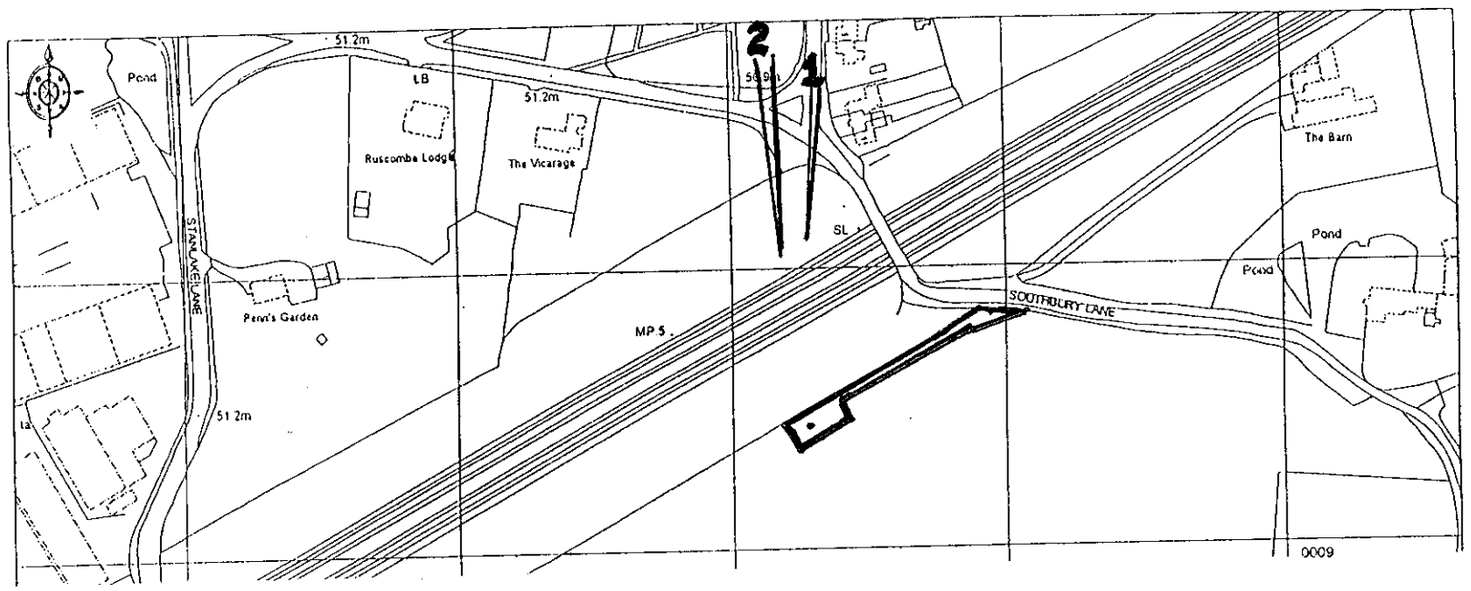

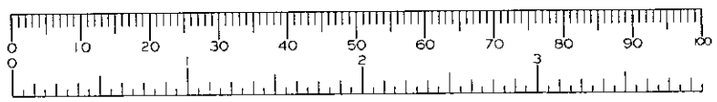

APPENDIX 2

PHOTOGRAPH VIEWPOINTS
TAKEN 11 APRIL 2000

DELEGATED

23.MAY2000* 1568

REFUSED

PROPOSED MAST HEIGHT



View 1 - Adjoining 3 Church Lane towards existing and proposed mast.

PROPOSED MAST HEIGHT

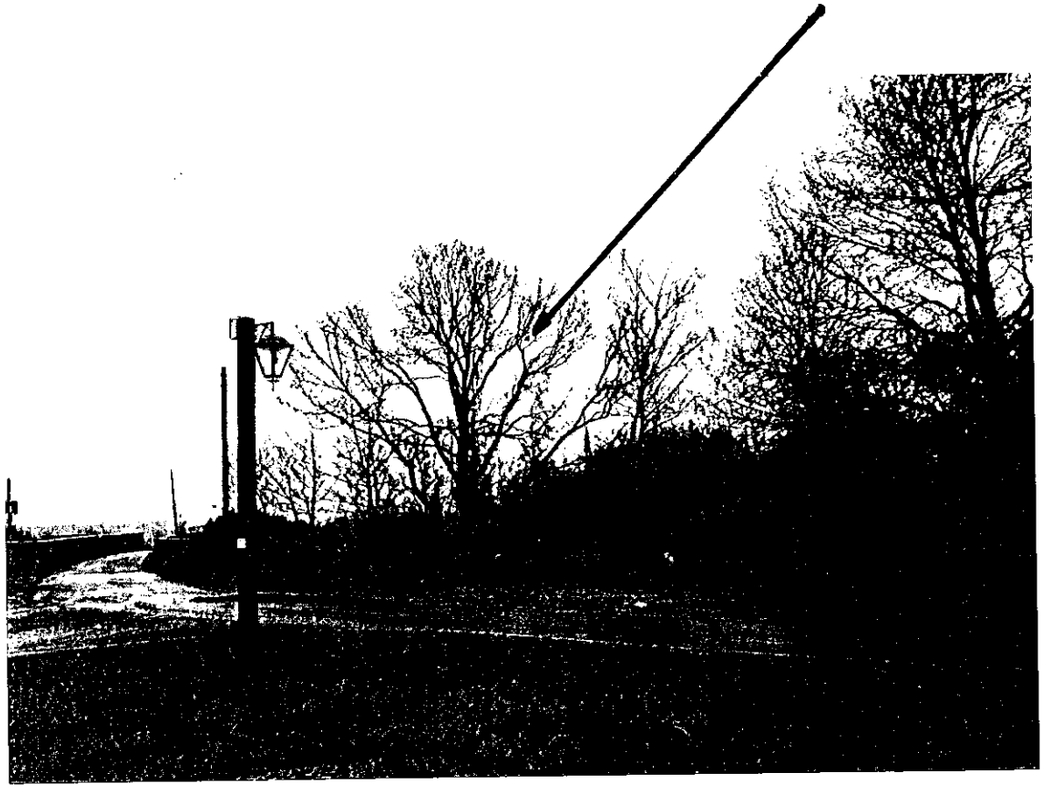

View 2 - From the green to the south of St. James Church
showing intervening trees and the height of the proposed mast.

PROJECTION

DO NOT SCALE

IF IN DOUBT ASK

CAD PATH E:\ORANGE\DRAWINGS\S-SHARE\BRK0029

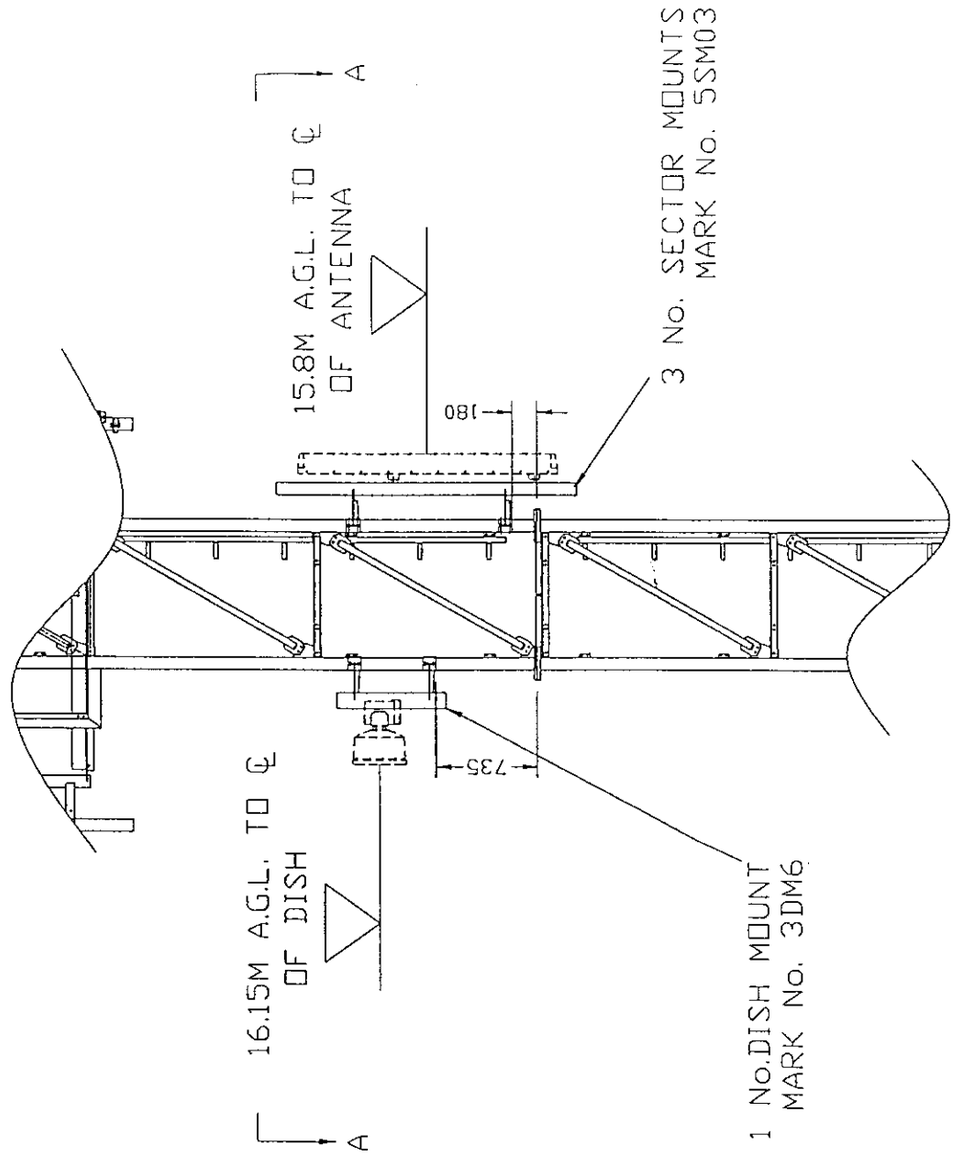

ELEVATION ON TOWER

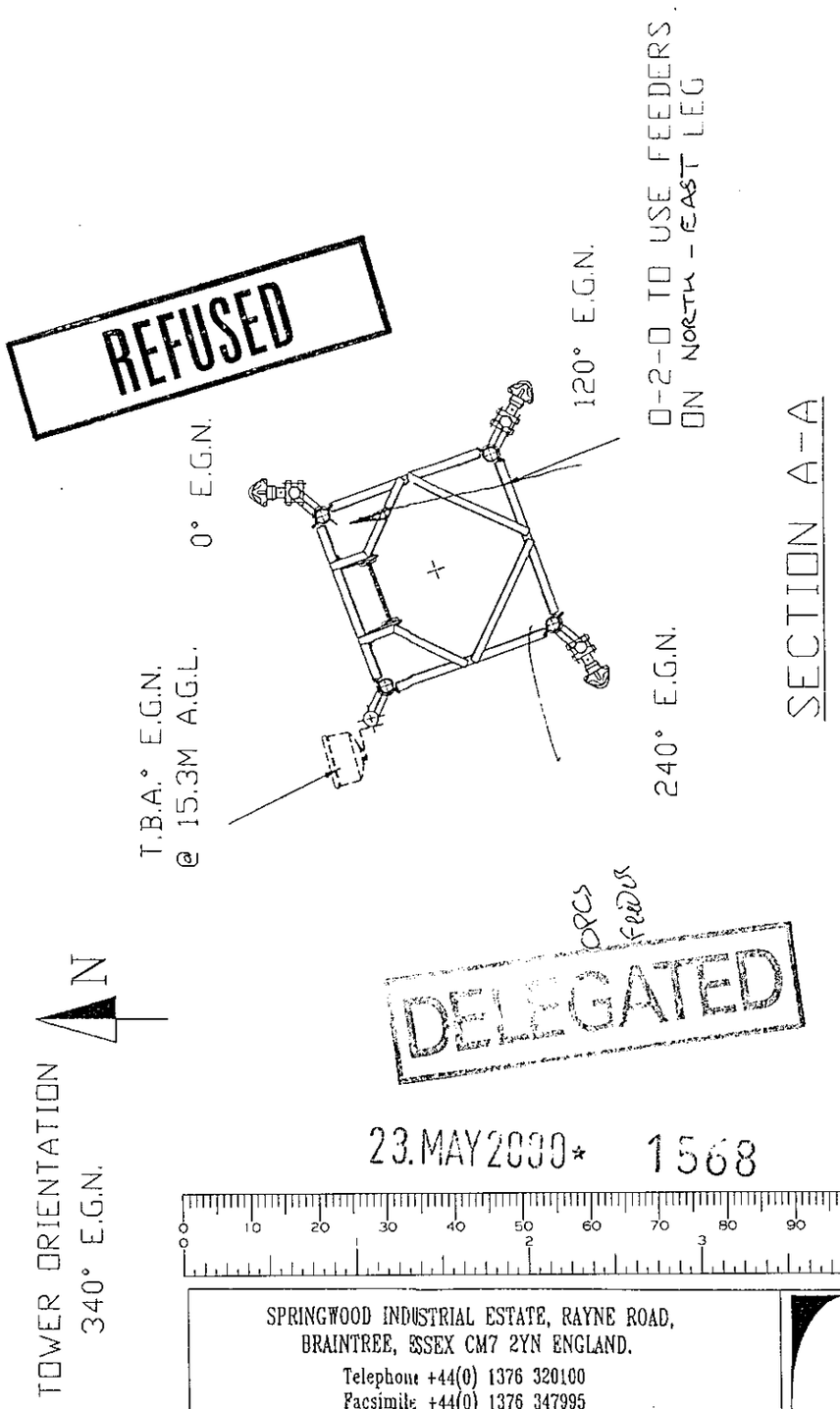

DELEGATED

23.MAY2000* 1568

GENERAL NOTES

1. ALL BOLTS TO BE GRADE 8.8 COMPLETE WITH NUT AND SINGLE COIL SPRING WASHER
2. BOLTS TO COMPLY WITH BS 4190.
3. SINGLE COIL SPRING WASHERS TO COMPLY WITH BS 4310.
4. ALL BOLTS TO BE SPUN GALVANISED TO BSEN ISO 1461.
5. ALL 'U' BOLTS TO BE GRADE 4.6 COMPLETE WITH 4 FULL NUTS, 2 FLAT WASHERS & 2 SPRING WASHERS

ALL DIMENSIONS IN mm UNLESS OTHERWISE STATED

REMOVE ALL SHARP EDGES & BURRS

SPRINGWOOD INDUSTRIAL ESTATE, RAYNE ROAD, BRAINTREE, ESSEX CM7 2YN ENGLAND.
Telephone +44(0) 1376 320100
Facsimile +44(0) 1376 347995

CLIENT

Orange Personal Communications Services Ltd
St James Court, Great Park Road,
Almondsbury Park, Bradley Stoke,
Bristol. BS12 4QJ

SWANN ANTENNA TOWER SYSTEMS

REV.			DRAWN	DRAWN DATE	CHECKED	SCALE	WORKS NUMBER	MATERIAL	FINISH	SWANN APPOINTED CONSULTANT
A	INITIAL ISSUE	04-10-99	PM	OCT99		NTS		MILD STEEL TO BSEN 10025	HOT DIPPED GALVANISED TO BSEN ISO 1461	

© The copyright of this drawing is reserved by R. & T. Swann Ltd. It is issued on condition that it is not copied, reproduced, or disclosed to a third party, either wholly or in part, without the consent in writing of the company

TITLE GENERAL ARRANGEMENT OF SITE SHARE STEELWORK FOR O-2-O ON ORANGE 20M 5S TOWER @ BRK0029

Drawing Number BRK0029-SK1 A

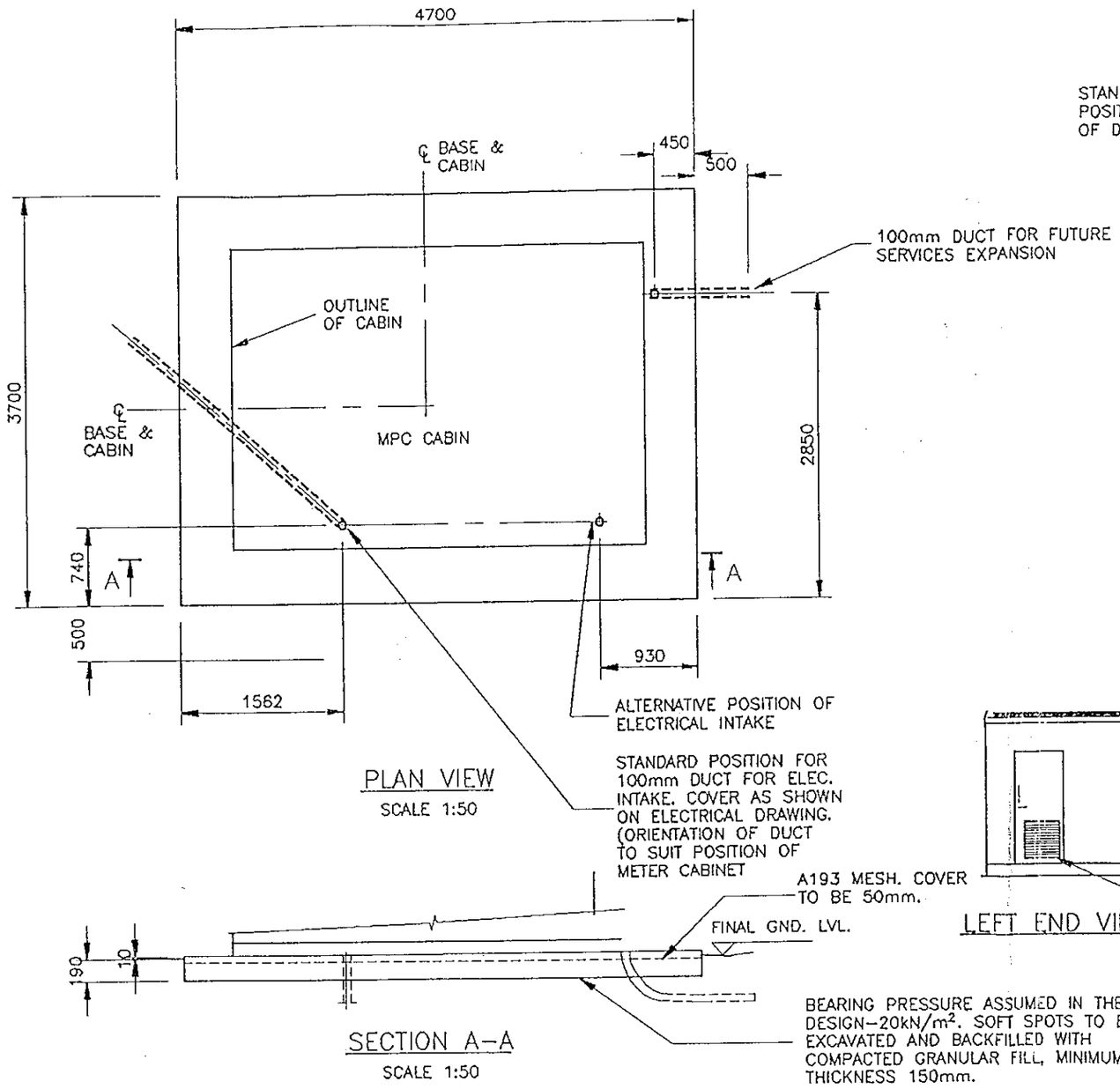

PLAN VIEW

SCALE 1:50

SECTION A–A

SCALE 1:50

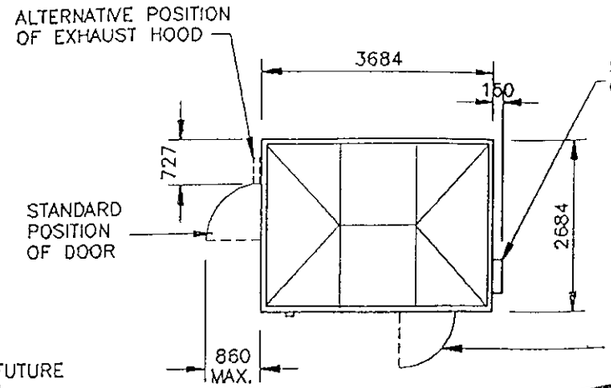

PLAN VIEW

DELEGATED

23.MAY2000* 1568

REFUSED

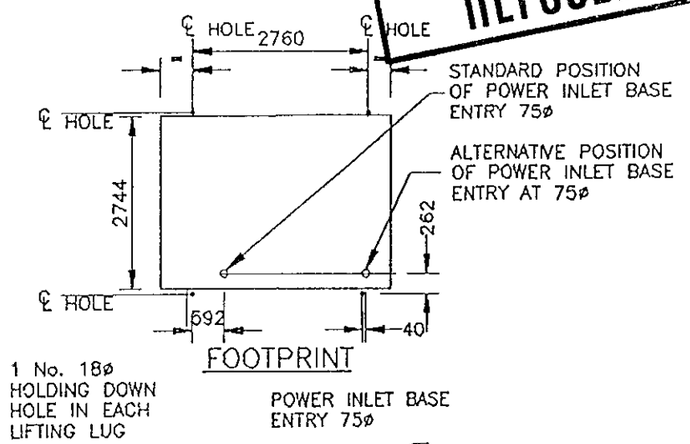

FOOTPRINT

1 No. 18ø HOLDING DOWN HOLE IN EACH LIFTING LUG

POWER INLET BASE ENTRY 75ø

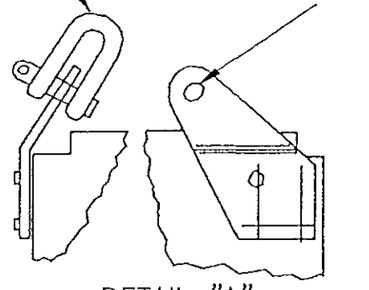

DETAIL "A"

(NOTE: LIFTING LUG REMOVABLE IF NECESSARY)

BS3032 SMALL SHACKLE (4572 TONNES)
BS6994 SMALL DEE SHACKLE (5 TONNES)
SLING ANGLE 45°
SLING LENGTH 3.3m

LEFT END VIEW

AIR INTAKE

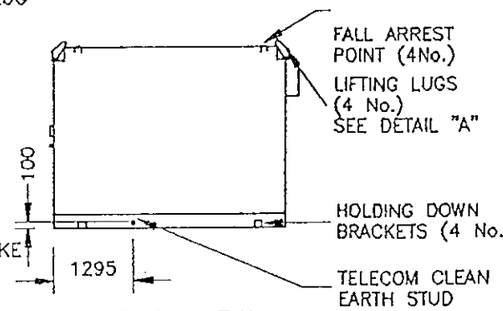

SIDE VIEW

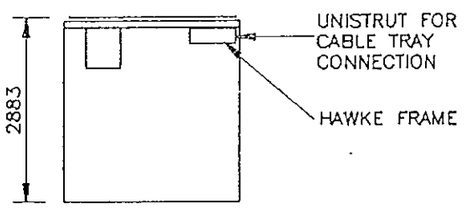

RIGHT END VIEW

MPC CABIN DETAILS Scale 1/100

COMMERCIAL IN CONFIDENCE

DO NOT SCALE

RELEVANT BS STANDARDS | BS 308 | BS 3429

Blyth & Blyth Associates (London)
16-18 HOWARD BUSINESS PARK
HOWARD CLOSE, WALTHAM ABBEY
ESSEX, EN9 1XE
TEL: WALTHAM ABBEY (01992) 763333

REV	DESCRIPTION	BY	DATE	CHKD
A	ELECTRIC DUCT TO CABIN REVISED	KSC	09.09.97	CB
	FOR APPROVAL	DRG	12.08.97	CB

TITLE
STRUCTURAL PLAN & ELEVATIONS
(SITESHARE)

ARTEMIS No

SCALE	DRAWN	CHECKED	APPROVED
AS SHOWN	DRG	CB	AFL
	DATE 12.08.97	DATE 12.08.97	DATE 12.08.97

ORANGE™

SI JAMES COURT
GREAT PARK ROAD
ALMONDSBURY
BRISTOL BS12 4QJ
TEL. 01454 618500
FAX 01454 618501

DRAWING NUMBER
30/STD 1/2/1

MERCURY PC REF: 99647

DELEGATED

23.MAY2000* 1568

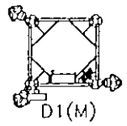

PLAN ON MPC EQUIPMENT
(1:100)

MERCURY EQUIPMENT;
3 No. CROSS POLAR ANTENNAS @ 90,210,300°EON,
6No. LNA UNITS,
1No. 0.3mø DISH @16.6m AGL

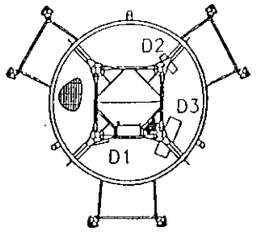

PLAN ON OPCS HEADFRAME
(1:100)

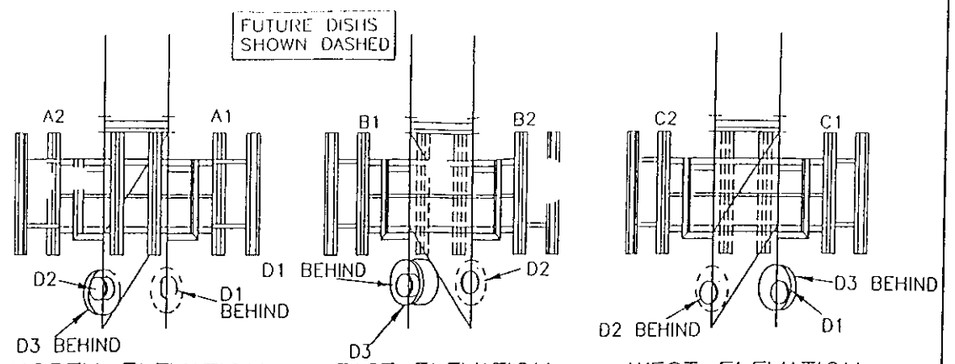

NORTH ELEVATION (1:100)

EAST ELEVATION (1:100)

WEST ELEVATION (1:100)

OPCS HEADFRAME

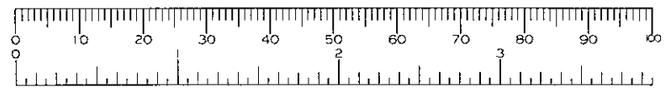

LOCATION PLAN (NTS)

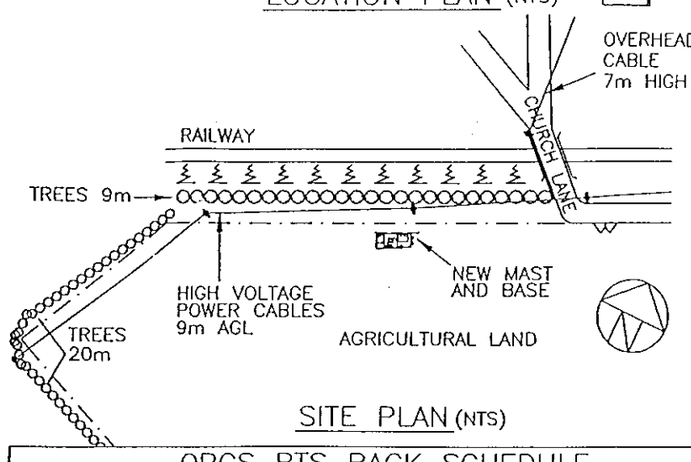

SITE PLAN (NTS)

REVISED

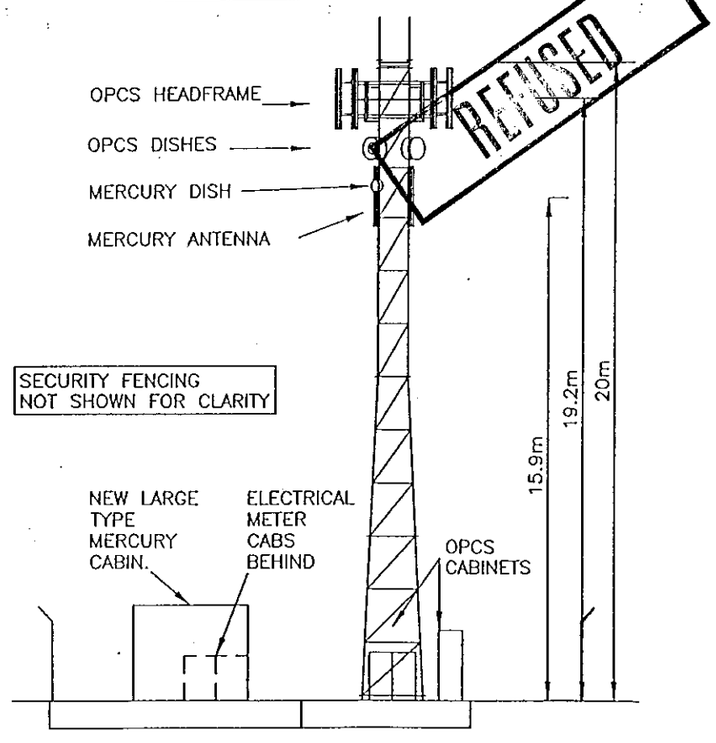

ELEVATION OF TOWER
(1:200)

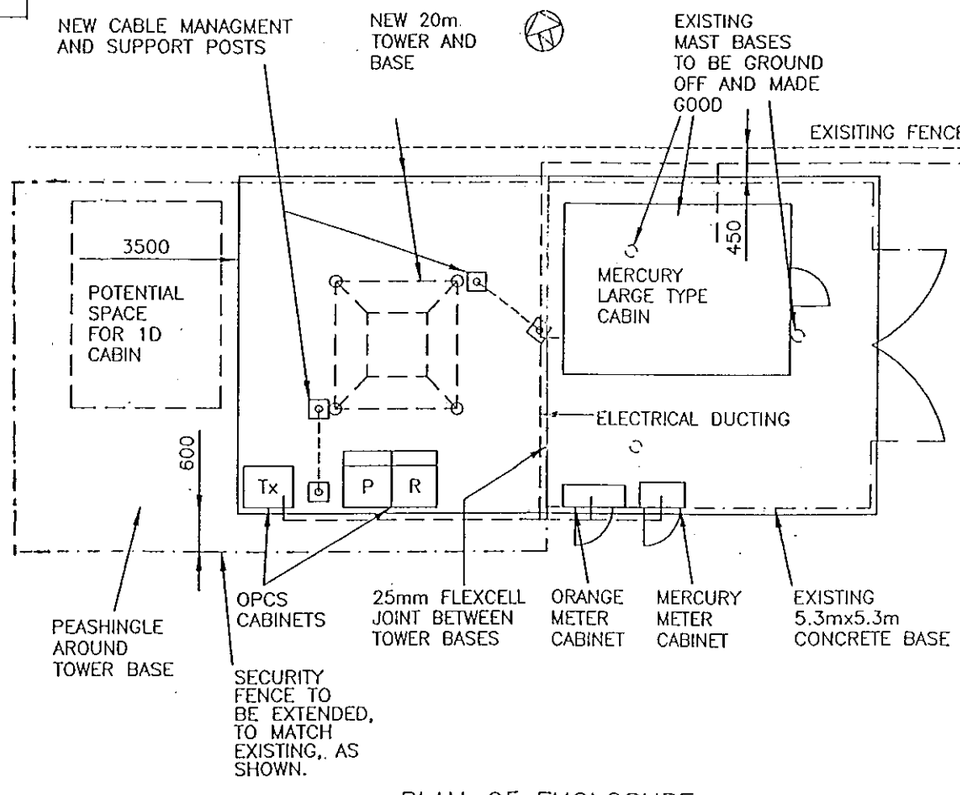

PLAN OF ENCLOSURE
(1:100)

OPCS BTS RACK SCHEDULE

REF	TYPE	MANUFACTURER	OTHER INFORMATION
1	P&R	NOKIA	
2	Tx	NOKIA	
3			
4			
5			
6			

OPCS ANTENNA KEY

REF	FUNCTION	SECTOR	TYPE/SIZE	BEARING	HT TO TOP	HT TO CNTR	REMOTE RFU
A1	TX	A	120° SECTOR	0°EON	20m		
A2		A	120° SECTOR	0°EON	20m		
B1	TX	B	120° SECTOR	120°EON	20m		
B2		B	120° SECTOR	120°EON	20m		
C1	TX	C	120° SECTOR	240°EON	20m		
C2		C	120° SECTOR	240°EON	20m		
D1			0.3m	164.6°EON		17.66m	
D2			0.3m	060.4°EON		17.66m	
D3			0.6m	106.6°EON		17.66m	YES-2m

PC/BRK0029/-/SHA/U99056065

COMMERCIAL IN CONFIDENCE

DO NOT SCALE	C16649/116
RELEVANT BS STANDARDS	BS 308 | BS 3429

OSCAR FABER
Marlborough House, Upper Marlborough Road
St.Albans, Herts AL1 3UT
Telephone: 0181-784 5784 Facsimile: 0181-784 5700

REV	DESCRIPTION	BY	DATE	CHKD
G	SECURITY FENCE AND COMPOUND AMENDED TO SCALE	BRB	19/5/00	BRB
F	OPCS AMENDMENTS (116P)	SJH	01.00	
E	SITE SHARE AND CAD (116P)	RNS	9.99	BGL
D	TOWER HT BACK TO 15m	NF	6.98	BGL
C	TOWER HEIGHT AMENDED	JCW	5.95	GC
B	X-REFS CORRECTED	GC	12.92	RSS
A	X-REFS ADDED	GH	8.92	GC

TITLE RUSCOMBE, CHURCH LANE
TWYFORD, Nr READING
BERKSHIRE

ENGINEERING SCHEMATIC

CELL No. BRK0029 ARTEMIS No. C2289

SCALE	DRAWN	CHECKED	APPROVED
AS SHOWN	DH	GC	GH
	DATE AUG 92	DATE AUG 92	DATE AUG 92

DRAWING NUMBER 30/BRK0029/D5C-/01

F G

orange
hutchison telecom
St. James Court
Great Park Road
Almondsbury Park
Bradley Stoke
Bristol
BS12 4QJ
Tel 01454 624600
Fax 01454 618501

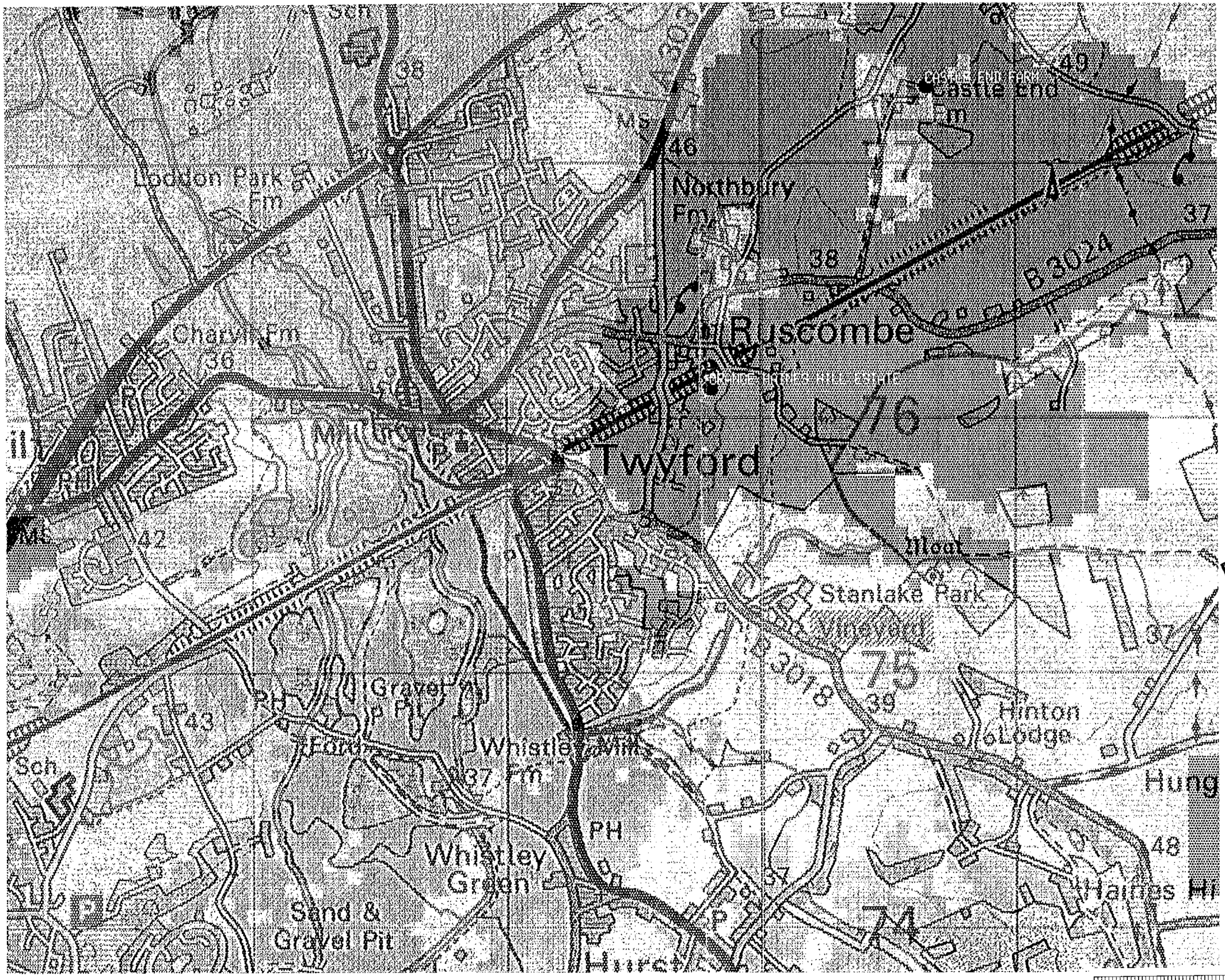

One2One Plot Ref: 4933

98647 Orange Haines Hill Estate

Coverage from planned and exisiting sites including the Orange Site

Produced by Nick Hudson
On 11 February 2000

PLOT 2

23.MAY2000* 1568

DELEGATED

RE US

Reproduced from the 1997 Ordanance Survey 1:50 000 Scale Landranger map with the permission of The Controller of Her Majesty's Stationary Office, Crown copyright Mercury Personal Communications, Borehamwood, Herts, Licence No. AL 51286A0001

