APPLICATION NO:
F/2001/5334

LOCATION:
Wokingham Waterside Centre Thames Valley Park Drive, Reading.

APPLICANT:
Thames Valley Park Manco Ltd. C/O Owain Griffiths

PROPOSAL:
Proposed erection of one CCTV camera mounted on a 6 metre high mast.

EARLIEST DATE FOR DECISION: **23/12/2001**

APPLICATION WILL HAVE EXPIRED ON:
17/01/2002

CASE OFFICER: **Andrew Thorley**

APPROVED

448

Do

RAILEX
Marbleboard

EASIFILE EP7

(AT)

WOKINGHAM DISTRICT COUNCIL

TOWN AND COUNTRY PLANNING ACTS

Notification of Approval of Permission

Thames Valley Park Manco Ltd.
C/O Owain Griffiths
GVA Grimley
University Gate
Park Row
Bristol
BS1 5UB

Application Number: F/2001/5334

Parish: **EARLEY**

Location: **Wokingham Waterside Centre, Thames Valley Park Drive, Reading.**

Proposal: **Proposed erection of one CCTV camera mounted on a 6 metre high mast.**

The Wokingham District Council in pursuance of their powers under the above Acts and Regulations hereby **Approve Permission** for carrying out the above development in accordance with the application and the accompanying plans submitted to the Council subject to compliance with the following condition, the reason for which is specified hereunder.

Condition
1. The development hereby permitted shall be begun before the expiration of five years from the date of this permission.

Reason
1. In pursuance of Section 91(1) of the Town and Country Planning Act 1990.

Informative
1. You are advised, in compliance with The Town and Country Planning (General Development Procedure) (England) (Amendment) Order 2000, that the following policies and/or proposals in the development plan are relevant to this decision:

Berkshire Structure Plan Policies EN3 and LD3.
Deposit Draft Wokingham District Local Plan Policies WOS3, WBE1, WLL4 and WIC16.

A Cronin

Anna Cronin
Head of Planning & Transportation
Date: 16/01/2002

Notice checked by: _____

If this notice grants permission to proceed with the proposal the applicant is reminded that it relates to planning permission only and does not constitute approval under any other legislation including Building Regulations.

22.NOV.2001 5334

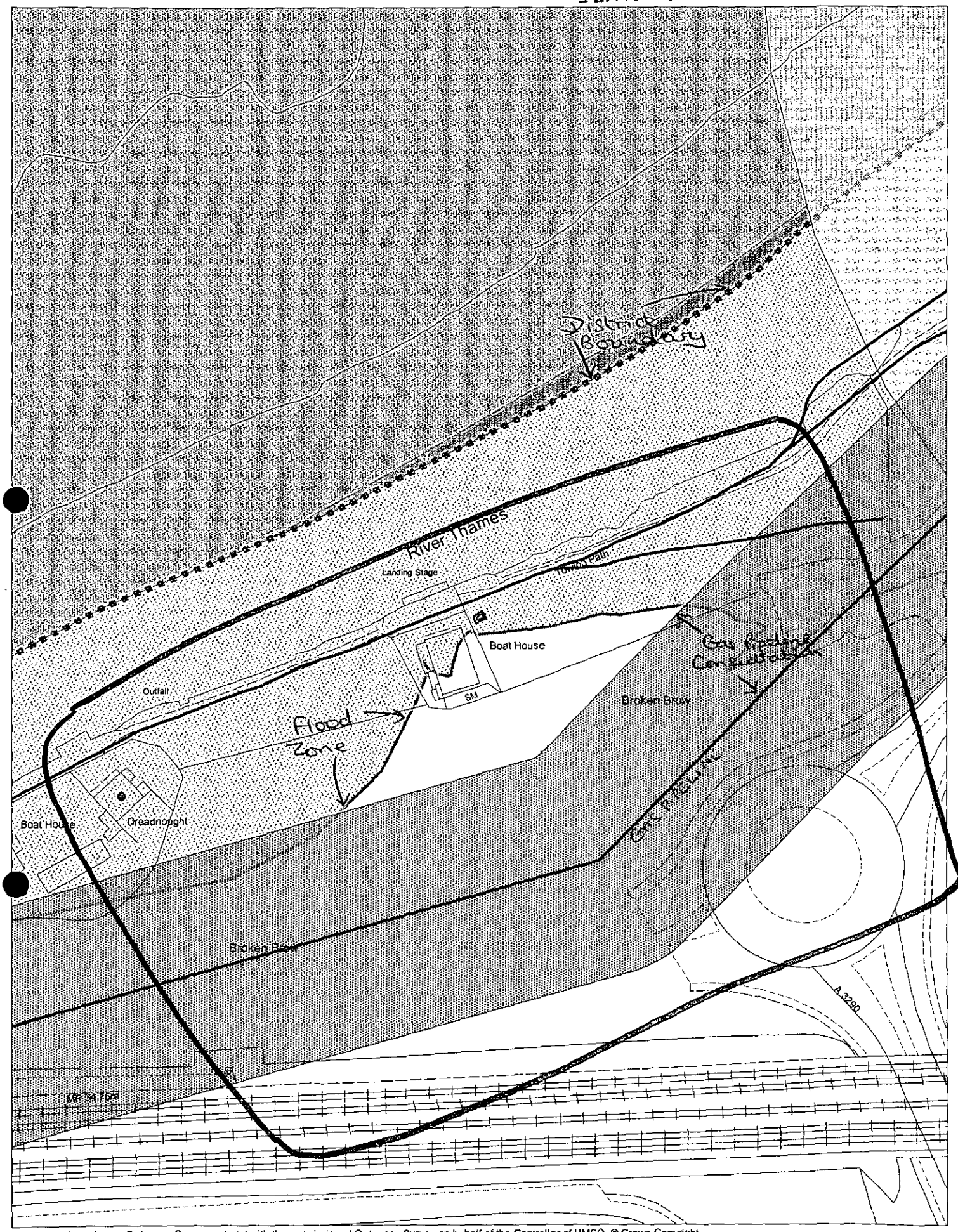

This map is based upon Ordnance Survey material with the permission of Ordnance Survey on behalf of the Controller of HMSO. © Crown Copyright. Unauthorised reproduction infringes Crown Copyright and may lead to prosecution or civil proceedings.Wokingham District Council Licence LA086134

Development Control Section, Environmental Services, Wokingham District Council.

27 November 2001 Scale: 1 : 1250

N W E S

Tel: 0118 974 6441

Date: 11 January 2002

My ref: F/2001/5334

PLANNING SERVICES	HPT
POL	TLS
DC	ENF
APP	
CS	
16 JAN 2002	
COPIES TO:	ACK:
	FILE:

CONFIDENTIAL

Environmental Services Department
Planning Services
P.O. Box 157
Shute End, Wokingham
Berkshire RG40 1WR
Tel: (0118) 974 6000
Fax: (0118) 974 6484
Minicom No: (0118) 974 6991
DX: 33506 – Wokingham

Councillor J Lissaman
46 Palmerstone Road
Earley
RG6 1HL

Dear Councillor

Application Number: F/2001/5334
Wokingham Waterside Centre, Thames Valley Park Drive, , Reading.
Proposed erection of one CCTV camera mounted on a 6 metre high mast.

I write to let you know that the above mentioned application has been recommended for APPROVAL: ☑ REFUSAL: ☐ under delegated powers.

If you have any questions please do not hesitate to contact **Andrew Thorley** on **0118 974 6441**. If you then feel the application needs to be transferred to the next available Development Control Committee for decision please fill in the form below.
This form must be received no later than 22 January 2002

Yours faithfully

Principal Development Control Officer

LISTING FORM

Case officer: **Andrew Thorley** Application Number: **F/2001/5334**
Wokingham Waterside Centre, Thames Valley Park Drive, , Reading.
Proposed erection of one CCTV camera mounted on a 6 metre high mast.

Transfer: Yes ☐ No ☑
Reason for Transfer:

Signed: _____ Date: 15/01/02

Councillor J Lissaman

NB. It would be helpful for speedy decision making if you could respond, even if you do not wish this application to be transferred.

Tel: 0118 974 6441

Date: 11 January 2002

My ref: F/2001/5334

Environmental Services Department
Planning Services
P.O. Box 157
Shute End, Wokingham
Berkshire RG40 1WR
Tel: (0118) 974 6000
Fax: (0118) 974 6484
Minicom No: (0118) 974 6991
DX: 33506 – Wokingham

CONFIDENTIAL

Councillor J Lissaman
46 Palmerstone Road
Earley
RG6 1HL

Dear Councillor

Application Number: F/2001/5334
Wokingham Waterside Centre, Thames Valley Park Drive, , Reading.
Proposed erection of one CCTV camera mounted on a 6 metre high mast.

I write to let you know that the above mentioned application has been recommended for APPROVAL: ☑ REFUSAL: ☐ under delegated powers.

If you have any questions please do not hesitate to contact **Andrew Thorley** on **0118 974 6441**. If you then feel the application needs to be transferred to the next available Development Control Committee for decision please fill in the form below.
This form must be received no later than 22 January 2002

Yours faithfully

MA Thorley

Principal Development Control Officer

LISTING FORM

Case officer: **Andrew Thorley** Application Number: **F/2001/5334**
Wokingham Waterside Centre, Thames Valley Park Drive, , Reading.
Proposed erection of one CCTV camera mounted on a 6 metre high mast.

Transfer: Yes ☐ No ☐
Reason for Transfer:

_____

_____

Signed: _____ Date: _____

Councillor J Lissaman

NB. It would be helpful for speedy decision making if you could respond, even if you do not wish this application to be transferred.

Tel: 0118 974 6441

Date: 11 January 2002

My ref: F/2001/5334

Environmental Services Department
Planning Services
P.O. Box 157
Shute End, Wokingham
Berkshire RG40 1WR
Tel: (0118) 974 6000
Fax: (0118) 974 6484
Minicom No: (0118) 974 6991
DX: 33506 – Wokingham

CONFIDENTIAL

Councillor G Storry
50 Church Road
Earley
RG6 1HT

Dear Councillor

Application Number: F/2001/5334
Wokingham Waterside Centre, Thames Valley Park Drive, , Reading.
Proposed erection of one CCTV camera mounted on a 6 metre high mast..

I write to let you know that the above mentioned application has been recommended for APPROVAL: ☑ ~~REFUSAL:~~ ☐ under delegated powers.

If you have any questions please do not hesitate to contact **Andrew Thorley** on **0118 974 6441**. If you then feel the application needs to be transferred to the next available Development Control Committee for decision please contact the Councillor for your area responsible for planning matters as soon as possible

Yours faithfully

Principal Development Control Officer

22.NOV.2001

GVA Grim

International Property

University Gate, Pa
Bristol BS
Telephone 0870 900 8
Facsimile 0117 926 0
www.gvagrimley.co

Our Ref.: OPG/07A112801

20 November 2001

Ms Lisa Jarvis
Wokingham District Council
Estates Department
Shute End
Wokingham
Berkshire, RG40 1WR

Direct Line 0117 988 5346
opg@gvagrimley.co.uk

COPY

Dear Ms Jarvis,

RE: PLANNING APPLICATION FOR THE INSTALLATION OF A CCTV SURVEILLANCE CAMERA AT WOKINGHAM WATERSIDE CENTRE, THAMES VALLEY PARK, EARLEY, BERKSHIRE RG6 1AD

We hereby give notice to Wokingham District Council, as owners of the above site, of an application for planning permission to install a CCTV camera at the above site. Please find enclosed a formal notice of application, as required under the provisions of Schedule 2 to Part 1 of the Town and County Planning (General Development Procedure) Order 1995.

If you wish to discuss any aspect of the application please do not hesitate to contact me on 0117 9885346.

Yours sincerely,

Owain Griffiths
Planning & Development Consultancy

Enc.

cc Development Control, Planning Department, Wokingham District Council
John Cooper – Managing Director - Wokingham Waterside Centre
Graham Willson - Investment Management – GVA Grimley

WORK SHEET FOR : Andrew Thorley

Application Number : F/2001/5334

Applicant : Thames Valley Park Manco Ltd. C/O Owain Griffiths.

Location : Wokingham Waterside Centre, Thames Valley Park Drive, , Reading.

Proposal : Proposed erection of one CCTV camera mounted on a 6 metre high mast.

Site Notice Displayed ? :	YES	NO	DATE
	✓		19/12/01

Date of Neighbour Notifications : .....

Date of Site Visit : 19/12/01

Date Registered : 22/11/2001

Earliest Date for Decision : 23/12/2001

Latest Consultation Date/Site Notice Expiry Date : 23/12/2001

This application will have expired on: 17/01/2002. You need to make a decision 1 day prior to this date for this application to count as determined in less than 8 weeks.

Consultation Responses :

Earley PC: No objection
Reading BC: No objections
Thame Valley Police: No objections

Planning Issues :

1) Impact on character of Thames Riverside & surrounding area.

WLL4 Thames River Valley
WCC3
WLC16 Land liable to flood

Application Number: F/2001/5334
Appraisal:

1) Impact on the character of Thames riverside and surrounding area.

The proposal is for the erection of a close circuit television camera to be mounted on a 6 metre high mast, this is to be located 10 metres away from the Wokingham Waterside Centre, Thames Valley Park. This is to provide surveillance of the waterside centre and adjoining car park for security.

Due to its location and lightweight structure it is considered that the proposal will have a minimal visual impact on the riverside frontage and the surrounding area. The colour of the mast will match the existing waterside centre building.

Recommendation : Approval: [ ] **Refusal [ ]**
(tick appropriate box)

Application Number F/2001/5334
Conditions/Reasons for Refusal

No	Std Con	Std Reas	Non Std Conditions / Reasons for Refusal
1.	CO01	RO01	Full Permission - 5 Years

Informative for approvals
N16
LODDON AREA LOCAL PLAN POLICIES:
SOUTH-EAST AREA LOCAL PLAN POLICIES:
WOKINGHAM DISTRICT LOCAL PLAN POLICIES: WOS3, WBE1, WLL4, WIC16,
GREEN BELT LOCAL PLAN POLICIES:
BERKSHIRE STRUCTURE PLAN POLICIES: EN3, LD3
MINERALS LOCAL PLAN POLICIES:

RECOMMENDATION AND CONDITIONS/REASONS AGREED: _____
(Development Control Manager)

Date: _____

RECORD OF SITE VISIT

SITE ADDRESS: Wokingham Waterside Centre Thames Valley Park Drive Reading.

APPLICATION NUMBER: F/2001/5334

OFFICER: Andrew Thorley

DATE OF SITE VISIT: 19/12/01

1 SITE/STATUTORY NOTICE DISPLAYED ? Yes

2. DESCRIPTION OF SURROUNDINGS "Thames Valley Park"
Thames river frontage
and Oracle / business park

3. DESCRIPTION OF SITE/BUILDING

Water meadow adjacent to waterside centre and the old boat house site

4. RELATIONSHIP TO ADJOINING PROPERTIES

Refer to location plan

5. SITE CONSTRAINTS

TREES — None

ACCESS/PARKING —

LEVELS —

BOUNDARY TREATMENT N/A

OTHERS

—

NB. The proposal will have minimal impact on the surroundings. It will not be visible from road /street scene

ADDITIONAL NEIGHBOUR CONSULTATION SHEET

APPLICATION NUMBER: F/2001/5334
CASE OFFICER: Andrew Thorley

ADDRESS OF ADDITIONAL NEIGHBOUR CONSULTATION	NUMBER OF DAYS FOR RESPONSE	DATE LETTER ISSUED (for Admin use)

Received by Wokingham District Council

Application No: F/2001/5334

PROPOSAL:
Proposed erection of one CCTV camera mounted on a 6 metre high mast.

LOCATION:
Wokingham Waterside Centre, Thames Valley Park Drive, , Reading.

The application is available for inspection at the locations & during the times detailed below:

WOKINGHAM DISTRICT COUNCIL, PLANNING RECEPTION, SHUTE END, WOKINGHAM between 8.30 - 5.00 Monday - Thursday & 8.30 - 4.00 Friday. (TEL: (0118) 974 6428)
OR
WOODLEY LIBRARY, HEADLEY ROAD, WOODLEY between 9.30am - 7.00pm Mon, Thurs & Fri. 9.30am - 5.00pm Tues, 9.30am - 1.00pm Saturday and 1.00pm - 4.00pm Sunday. (closed all day Wednesday). If you intend to view this application at Woodley Library please allow 4 days from the date of this letter for delivery of plans and remember to quote application number F/2001/5334 to enable the library staff to locate the correct information.
OR
EARLEY TOWN COUNCIL, RADSTOCK HOUSE, RADSTOCK LANE, EARLEY between 9.00am – 1.00pm & 2.00pm – 4.30pm Monday to Friday. (TEL: (0118) 986 8995)

Comments should be sent in writing QUOTING THE APPLICATION NUMBER to the Case Officer Andrew Thorley P.O. Box 157 Council Offices, Shute End, Wokingham Berkshire, RG40 1WR to arrive on or before 23/12/2001. Written comments submitted will become available for public inspection.

In view of the very large number of planning applications and letters of comment received, it will not be possible for an individual reply to be issued to observations made. However any comments will be taken into account when the application is determined and you will be notified of the decision.

Head of Planning and Transportation

29 November 2001

Reading
BOROUGH COUNCIL

Mr Tony Lear
Director of Environment

Civic Centre, Reading, RG1 7TD
☎ 0118 939 0900
DX 40124 Reading (Castle Street)
Fax: 0118 958 9770
Minicom 0118 939 0700

PLANNING SERVICES | HP 50944
TLS
ENF
14 DEC 2001
COPIES TO: | ACK:
FILE:

Wokingham District Council
Environmental Services PO Box 157
Shute End
WOKINGHAM
Berkshire
RG40 1WR

Our Ref: Out of Borough
Your Ref: F/2001/5334

Direct: ☎(0118) 939 0450

FAO Mr Andrew Thorley

13 December 2001

Your contact is: Christopher Bintcliffe

Dear Sir or Madam:

PROPOSED ERECTION OF CCTV CAMERA AT THAMES VALLEY PARK DRIVE

Thank you for consulting us regarding the above application. I apologise for our delay in replying.

Reading Borough Council have no observations to make on this application as it is some way from our boundary.

If I can be of any further assistance please do not hesitate to contact me.

Yours faithfully

Christopher Bintcliffe
Planning Technician

Beacon Council 2001-2002 Town Centre Regeneration

FROM: Andrew Thorley

DATE: 29 November 2001

DELEGATED

EARLEY TOWN CONSULTATION SHEET

Application Number: F/2001/5334

Proposal: Proposed erection of one CCTV camera mounted on a 6 metre high mast..

Site Address: Wokingham Waterside Centre, Thames Valley Park Drive, , Reading.

Applicant: Thames Valley Park Manco Ltd. C/O Owain Griffiths.

Your observations are required in respect of this application **by 23/12/2001** .

NO OBJECTION

PLANNING SERVICES	HPT
POL	TLS
DC	ENF
APP	
CS	
14 DEC 2001	
COPIES TO:	ACK:
	FILE:

SIGNED: _____ DATE: 13 DEC 2001

Clerk To Earley Parish/Town Council.

1327

WOKINGHAM DISTRICT COUNCIL

To ANDREW

Date 19/12 Time

WHILE YOU WERE OUT

Name PC STUBBS

THAMES VALLEY POLICE

Phone No. Ext.

Phoned	✓	Please call back	
Called to see you		Will call back	
Wants to see you		Urgent	

MESSAGE Re: 5334

Has No objections to setting up of CCTV camera for security purposes.

Signed

WOKINGHAM D.C. DEVELOPMENT CONTROL

Start date: 22 NOV 2001	
Officer: AT	Application No. F/2001/5334

Map No. 40 Site 0.01
Easting: ..... Flood Pln .....
Northing: ..... Mineral .....

Level: ☐ Sub Committee ☑ Delegated ☐ Sec. State
☐ Incorrect Fee ☐ Invalid ☐ PD

Description:
(E) Proposed erection of One C.C.T.V. Camera mounted on a 6 metre High Mast.

Location: Wokingham Waterside Centre Thames Valley Park

Parish: Earley Ward: WHITEGATES

Applicant: Thames Valley Parks Manco Ltd.

Fee Received 95.00 Required ..... Additional ..... Refund .....

Enforcement Section to be notified ☐ tick if required

Additional information required for validation

		Reason	Requested	Received
1	1:2500 OS location plan showing property edged in blue/red	Red line to include access?		
2	1:500 block plan showing existing & proposed dev. + adj. Properties	Scale?		20/11
3	Forms unsigned			
4	Correct S 66 certificate			
5	Elevation plans			
6	Floor plans			
7	Metric scale disclaimer			
8	Encroachment letter			
9	Miscellaneous			

APPLN NO. _____

ACTION REQUIRED BY DEVELOPMENT CONTROL

Conservation Area .....

Listed Building 1 2 2*

Advertisement Required .....

Date Site Notice Sent : 30/11 Parish Council Informed - YES / NO

INTERNAL CONSULTATIONS

Building Control .....
Landscape .....
Trees .....
Conservation Officer .....
Environmental Health .....
Housing .....
Leisure & Cultural services .....
Public Rights of Way .....
Property .....
District Secretary (only if called in by SOS) .....
Policy & Plans .....
Strategic Planning (JSPU) .....
Minerals (INTERNAL) .....
Archaeological Site (BABTIE) : .....
Education .....
Social Services .....
Highways .....

River Thames Society ✓
Ramblers Association — with map for mr Bounds

EXTERNAL CONSULTATIONS

Adjacent (DPA) : Reading
Adjacent Parish : .....
Southern Electricity Board .....
British Gas .....
PSA Oil Pipeline .....
Transco : .....
Environment Agency Flood Zone ✓ .....

Rail Track .....
Police Arch. Liaison Officer ✓ .....

HERITAGE BODIES

The Georgian Group .....
Ancient Monuments Society .....
Council for British Arch. .....
RCHME .....
Telecommunications (NRPB) : .....
Sport England : .....

OTHERS: (Rural Area, Countryside) .....

.....

No pre-apps .....

NEIGHBOURS:

2 x SIN + see map .....

+ Wokingham Waterside Centre ✓
Thames Valley Park
Earley, Berks, RG6 1AG

22.NOV.2001 * 5334

GVA Grimley

International Property Advisers

Your Ref:
Our Ref.: OPG/07A112801

20 November 2001

University Gate, Park Row
Bristol BS1 5UB
Telephone 0870 900 89 90
Facsimile 0117 926 0607
www.gvagrimley.co.uk

The District Planning Officer
Wokingham District Council
Planning Department
Shute End
Wokingham
Berkshire, RG40 1WR

Direct Line 0117 988 5346
opg@gvagrimley.co.uk

Dear Sir/Madam,

RE: PLANNING APPLICATION FOR THE INSTALLATION OF A CCTV SURVEILLANCE CAMERA AT WOKINGHAM WATERSIDE CENTRE, THAMES VALLEY PARK, EARLEY, BERKSHIRE RG6 1AD

We write on behalf of our clients, Thames Valley Park Management Company Limited, to submit a planning application for permission to install a CCTV camera at the above site. Accordingly, please find enclosed the following documents:

- Completed application forms and certificate (5 copies);
- Site location plan ref: 07A11280/01;
- Plan ref: 07A11280/02, showing the location of the camera;
- Technical information relating to the column and the camera housing;
- A cheque for £95, being the requisite application fee.

The proposal is for the erection of a CCTV radio controlled camera which will be mounted on a 6 metre high column, secured in a 1.4 metre square concrete base. You will note that the Wokingham Waterside Centre is not actually shown on the Ordnance Survey Site Location Plan submitted, reference 07A11280/01. However, plan reference 07A11280/02 illustrates the proposed location of the camera to the rear of the building providing surveillance over this vulnerable part of the site. The application is accompanied by technical information for the camera housing equipment and the supporting column, which are to be provided by Dennard and Altron Communications Equipment Ltd respectively.

I trust the information submitted is sufficient for you to register the application and we look forward to receiving confirmation of this. However, if you do require any further information or wish to discuss any aspect of the application proposals, please do not hesitate to contact me on 0117 9885346.

22.NOV.2001 5334

I look forward to hearing from you in due course.

Yours faithfully,

Owain Griffiths
Planning & Development Consultancy

Enc

cc John Cooper – Managing Director - Wokingham Waterside Centre
Graham Willson – Investment Management - GVA Grimley

COPY
22.NOV.2001 * 5334

GVA Grimley

International Property Advisers

University Gate, Park Row
Bristol BS1 5UB
Telephone 0870 900 89 90
Facsimile 0117 926 0607
www.gvagrimley.co.uk

Direct Line 0117 988 5346
opg@gvagrimley.co.uk

Our Ref.: OPG/07A112801

20 November 2001

Ms Lisa Jarvis
Wokingham District Council
Estates Department
Shute End
Wokingham
Berkshire, RG40 1WR

Dear Ms Jarvis,

RE: PLANNING APPLICATION FOR THE INSTALLATION OF A CCTV SURVEILLANCE CAMERA AT WOKINGHAM WATERSIDE CENTRE, THAMES VALLEY PARK, EARLEY, BERKSHIRE RG6 1AD

We hereby give notice to Wokingham District Council, as owners of the above site, of an application for planning permission to install a CCTV camera at the above site. Please find enclosed a formal notice of application, as required under the provisions of Schedule 2 to Part 1 of the Town and County Planning (General Development Procedure) Order 1995.

If you wish to discuss any aspect of the application please do not hesitate to contact me on 0117 9885346.

Yours sincerely,

Owain Griffiths
Planning & Development Consultancy

Enc.

cc Development Control, Planning Department, Wokingham District Council
John Cooper – Managing Director - Wokingham Waterside Centre
Graham Willson - Investment Management – GVA Grimley

1913/a

SCHEDULE 2

22.NOV.2001 * 5334

Articles 6, 7 and 9

PART 1
Town and Country Planning (General Development Procedure) Order 1995

NOTICE UNDER ARTICLE 6 OF APPLICATION FOR PLANNING PERMISSION

(to be published in a newspaper or to be served on an owner or a tenant**)*

Proposed development at *(a)* WOKINGHAM WATERSIDE CENTRE, THAMES VALLEY PARK, EARLEY, BERKSHIRE RG6 1AG

I give notice that *(b)* THAMES VALLEY PARK MANAGEMENT COMPANY Ltd, C/O GVA GRIMLEY

is applying to the *(c)* WOKINGHAM DISTRICT Council

for planning permission to *(d)* ERECT A CCTV CAMERA ON A 6 METRE HIGH MAST.

Any owner* of the land or tenant** who wishes to make representations about this application should write to the Council at *(e)* SHUTE END, WOKINGHAM, BERKSHIRE RG40 1BN.

by *(f)* TUESDAY 11TH DECEMBER 2001.

* "owner" means a person having a freehold interest or a leasehold interest the unexpired term of which is not less than seven years, or, in the case of development consisting of the winning or working of minerals, a person entitled to an interest in a mineral in the land (other than oil, gas, coal, gold or silver).

** "tenant" means a tenant of an agricultural holding any part of which is comprised in the land.

Signed GVA GRIMLEY

† On behalf of THAMES VALLEY PARK MANCO Ltd.

Date 20 NOVEMBER 2001

Statement of owners' rights

The grant of planning permission does not affect owners' rights to retain or dispose of their property, unless there is some provision to the contrary in an agreement or in a lease.

Statement of agricultural tenants' rights

The grant of planning permission for non-agricultural development may affect agricultural tenants' security of tenure.

† Delete where inappropriate

Insert:

(a) address or location of the proposed development
(b) applicant's name
(c) name of Council
(d) description of the proposed development
(e) address of the Council
(f) date giving a period of 21 days beginning with the date of service, or 14 days beginning with the date of publication, of the notice (as the case may be).

1913 /a

SCHEDULE 2 Articles 6, 7 and 9

PART 1
Town and Country Planning (General Development Procedure) Order 1995

NOTICE UNDER ARTICLE 6 OF APPLICATION FOR PLANNING PERMISSION

(to be published in a newspaper or to be served on an owner or a tenant**)*

Proposed development at *(a)* WOKINGHAM WATERSIDE CENTRE, THAMES VALLEY PARK, EARLEY, BERKSHIRE RG6 1AG

I give notice that *(b)* THAMES VALLEY PARK MANAGEMENT COMPANY Ltd, C/O GVA GRIMLEY

is applying to the *(c)* WOKINGHAM DISTRICT Council

for planning permission to *(d)* ERECT A CCTV CAMERA ON A 6 METRE HIGH MAST.

Any owner* of the land or tenant** who wishes to make representations about this application should write to the Council at *(e)* SHUTE END, WOKINGHAM, BERKSHIRE RG40 1BN.

● *(f)* TUESDAY 11TH DECEMBER 2001.

* "owner" means a person having a freehold interest or a leasehold interest the unexpired term of which is not less than seven years, or, in the case of development consisting of the winning or working of minerals, a person entitled to an interest in a mineral in the land (other than oil, gas, coal, gold or silver).

** "tenant" means a tenant of an agricultural holding any part of which is comprised in the land.

Signed GVA GRIMLEY

† On behalf of THAMES VALLEY PARK MANCO Ltd.

Date 20 NOVEMBER 2001

Statement of owners' rights

The grant of planning permission does not affect owners' rights to retain or dispose of their property, unless there is some provision to the contrary in an agreement or in a lease.

● *tement of agricultural tenants' rights*

The grant of planning permission for non-agricultural development may affect agricultural tenants' security of tenure.

† Delete where inappropriate

Insert:

(a) address or location of the proposed development
(b) applicant's name
(c) name of Council
(d) description of the proposed development
(e) address of the Council
(f) date giving a period of 21 days beginning with the date of service, or 14 days beginning with the date of publication, of the notice (as the case may be).

1913/b **Town and Country Planning (General Development Procedure) Order 1995**

22 NOV 2001 * 5334

NOTICE UNDER ARTICLE 6 OF APPLICATION FOR PLANNING PERMISSION

(to be posted in the case of an application for planning permission for development consisting of the winning and working of minerals by underground operations (in addition to the service or publication of any other requisite notices in this Schedule))

Proposed development at *(a)* .....

I give notice that *(b)* .....

is applying to the *(c)* ..... Council

for planning permission to *(d)* .....

Members of the public may inspect copies of:

- the application
- the plans
- and other documents submitted with it

at *(e)* ..... during

all reasonable hours until *(f)* .....

Anyone who wishes to make representations about this application should write to the Council at *(g)* .....

..... by *(f)* .....

Signed .....

† On behalf of .....

Date .....

† Delete where inappropriate

Insert:

(a) address or location of the proposed development
(b) applicant's name
(c) name of Council
(d) description of the proposed development
(e) address at which the application may be inspected (the applicant is responsible for making the application available for inspection within the area of the local planning authority)
(f) date giving a period of 21 days, beginning with the date when the notice is posted
(g) address of Council

1769a

WOKINGHAM DISTRICT COUNCIL
PLANNING APPLICATION

22.NOV.2001 * 5334

PART 1

APPLICATION FOR PERMISSION TO CARRY OUT DEVELOPMENT - TOWN AND COUNTRY PLANNING ACTS

Please answer **ALL QUESTIONS** in **BLOCK LETTERS**. If a question is not applicable, answer **N/A** in space. Please submit **SIX** copies of this form and plans to:-

THE DISTRICT PLANNING OFFICER
WOKINGHAM DISTRICT COUNCIL
PLANNING DEPARTMENT
P O Box No. 157
COUNCIL OFFICES
SHUTE END
WOKINGHAM
BERKSHIRE, RG40 1WR

FOR OFFICE USE ONLY

1. **APPLICANT'S NAME** THAMES VALLEY PARK MANCO Ltd
ADDRESS C/O GVA GRIMLEY, UNIVERSITY GATE, PARK ROW, BRISTOL
POST CODE BS1 5UB **PHONE** 0117 988 5346

2. If the applicant has an agent, all correspondence will be sent to the agent
AGENT'S NAME GVA GRIMLEY
ADDRESS UNIVERSITY GATE, PARK ROW, BRISTOL. CONTACT: OWAIN GRIFFITHS
POST CODE BS1 5UB **PHONE** 0117 988 5346

3. On the plans show the SITE outlined in RED Show also OTHER land in the applicant's ownership or control in BLUE.
SITE LOCATION WOKINGHAM WATERSIDE CENTRE, THAMES VALLEY PARK, EARLEY, BERKSHIRE RG6 1AG

4. WHAT IS THE APPLICATION FOR ? Give brief details and state for what purpose this site and any buildings will be used.
ERECTION OF 1 NO. CCTV CAMERA MOUNTED ON A 6 METRE HIGH MAST

5. Give the area in hectares or part of a hectare
AREA OF SITE 1.44 M^2 (0.000144 ha)

6. State the applicant's interest in the land e.g. owner, prospective purchaser, lessee
OWNERSHIP LESSEE

7. List all the plans and drawings submitted with the application
PLANS/DRAWINGS SITE LOCATION PLAN 1:1250 - REF 07A112801; BLOCK PLAN - REF 07A112801/02.

8. DOES THE APPLICATION INVOLVE ANY OF THE FOLLOWING ?
Tick the boxes(x)

CHANGE OF USE	☐	REDEVELOPMENT	☐
ERECTION OF NEW BUILDING	☐	ALTERATION or EXTENSION	☐

9. WHAT TYPE OF APPLICATION IS THIS ? Tick one box only

OUTLINE PERMISSION	☐	See question 10
FULL PERMISSION	☑	
APPROVAL OF DETAILS/RESERVED MATTERS	☐	State relevant outline permission number Also complete Question 10
TEMPORARY PERMISSION	☐	State period required
RELAXATION OF CONDITIONS	☐	State relevant application number Conditions to be relaxed

10. IF THIS IS AN OUTLINE APPLICATION OR AN APPROVAL OF RESERVED MATTERS, which details, if any, do you wish to be considered as part of this application ?

		SITING	☐
EXTERNAL APPEARANCE	☐	DESIGN	☐
MEANS OF ACCESS	☐	LANDSCAPING	☐

11. WHAT IS THE EXISTING USE OF THE LAND AND/OR BUILDING(S) e.g. residential, industrial, etc. If the site is vacant say so, and also state its previous use and when that ceased.

D2 LEISURE USE

12. DOES A PUBLIC RIGHT OF WAY CROSS OR ABUT THE SITE OR THE PROPOSED ACCESS? ~~YES~~/NO — If yes, show existing route(s) and any proposed alternatives on the plans

13. ARE THERE ANY TREES ON THE SITE? IF YES, ARE ANY TO BE FELLED? ~~YES~~/NO — If yes, please show their positions, spread and species on the plans and which, if any, are to be felled.

14. STATE EXTERNAL MATERIALS TO BE USED.

REFER TO BROCHURE

15. HOW WILL THE SITE BE ENCLOSED? Say whether walls, fences or hedges, and give height, colour and materials. If the site is divided into plots, say how each is to be enclosed.

N/A

16. HOW WILL SURFACE WATER BE DISPOSED OF?

N/A

17. HOW WILL FOUL SEWAGE BE DISPOSED OF?

To existing system YES/NO

If no, please give details

18. WHAT ARE THE ACCESS ARRANGEMENTS?
AS EXISTING
AS PROPOSED
Give details of pedestrian and vehicular access

N/A

19. HAS PROVISION BEEN MADE FOR THE DISABLED? See notes for applicants

N/A

20. IF THIS PROPOSAL INVOLVES RESIDENTIAL DEVELOPMENT OR THE LOSS OF RESIDENTIAL UNITS, COMPLETE THE FOLLOWING TABLE

	No. OF DWELLINGS/HABITABLE ROOMS PROPOSED	TO BE RETAINED	TO BE LOST
HOUSE	/ *	/ *	/ *
BUNGALOW	/ *	/ *	/ *
FLAT/MAISONETTE	/ *	/ *	/ *
OTHER	/ *	/ *	/ *

* STATE No. OF HABITABLE ROOMS

21. DOES THE PROPOSAL INVOLVE ANY NON-RESIDENTIAL BUILDING OR USE? YES/NO — If YES, complete Part 2 of the form

22. DOES THE PROPOSAL INVOLVE THE WINNING, WORKING OR PROCESSING OF MINERALS; THE DISPOSAL OF MINERAL WASTE, OR THE DEPOSIT OR PROCESSING OF REFUSE AND WASTE MATERIALS? ~~YES~~/NO — If YES, please ask for and complete Part 3 of the form

23. STATE THE FEE ENCLOSED WITH THIS APPLICATION The current scale of fees is enclosed. If you believe a reduced fee or no fee is payable, say why.

£95

I hereby apply for permission in respect of the particulars described above and in the attached plans and drawings. If planning permission is granted, the development must be carried out strictly in accordance with the approved plans. Failure to do so could result in enforcement action being taken. Permission under the Town & Country Planning Acts does not obviate the possible need to apply for Building Regulations approval.

SIGNED GVA GRIMLEY ON BEHALF OF T.V.P. MANCO Ltd DATE 20 NOVEMBER 2001

Before submitting the application check that it is complete, that all questions have been answered and that the site boundary and the new work are clearly edged in red on the plans. Every application must be accompanied by the appropriate certificate and fee. See "NOTES TO HELP APPLICANTS".

1769c

PLANNING APPLICATION

PART 2

This part of the form need only be completed if the application involves non-residential development. Please answer all questions in print or block letters. If the answer is not applicable, write N/A in the space. You may wish to amplify your answers in a covering letter.

24. STATE THE GROSS FLOOR SPACE (by external measurement) OF ALL BUILDINGS TO WHICH THIS APPLICATION REFERS.
Please give all floor areas in SQUARE METRES.

	USE CLASS	Existing floor space		Proposed additional floorspace created by	
		Retained in existing use	Lost by change of use or demolition	New building	Change of use
A1	SHOPS				
A2	FINANCIAL AND PROFESSIONAL SERVICES				
A3	FOOD AND DRINK				
B1(a)	OFFICE (other than A2)				
B1 (b)	RESEARCH AND DEVELOPMENT				
B1 (c)	LIGHT INDUSTRIAL				
●	GENERAL INDUSTRIAL				
B3-7	SPECIAL INDUSTRIAL				
B8	STORAGE OR DISTRIBUTION				
C1	HOTELS AND HOSTELS				
C2	RESIDENTIAL INSTITUTIONS				
D1	NON-RESIDENTIAL INSTITUTIONS				
D2	ASSEMBLY AND LEISURE				
OTHER	Please Specify				
OTHER	Please Specify				
	TOTAL				

25. IF C1 OR C2 USE IS PROPOSED, PLEASE STATE NUMBER OF BED SPACES

● WHAT PROVISION IS BEING MADE FOR PARKING?

	Cars	Lorries
Existing		
Proposed		

27. DESCRIBE THE ACTIVITY OR PROCESSES TO BE CARRIED ON
Please provide details of any equipment, plant or machinery to be installed and any end products. You may wish to amplify your answers in a covering letter.

28. WHO WILL OCCUPY THE PREMISES?
a) Give the name and current operating address of the proposed occupier
b) Will these premises be vacated?

29. IF KNOWN, HOW MANY PEOPLE ARE LIKELY TO BE EMPLOYED ON SITE AFTER COMPLETION OF THE DEVELOPMENT?

Existing Staff	Transferred Staff	New Staff	Total

30. DOES THE PROPOSAL INVOLVE THE USE OR STORAGE OF ANY OF THE HAZARDOUS SUBSTANCES LISTED IN THE NOTES?
If so, state this material, the quantity and method of storage.

Before submitting the application check that it is complete, that all questions have been answered and that the site boundary and the new work are clearly edged in red on the plans. Every application must be accompanied by the appropriate certificate and fee. See "NOTES TO HELP APPLICANTS".

1769d

YOUR PLANNING APPLICATION

WHY DO YOU NEED TO MAKE A PLANNING APPLICATION ?

New buildings, major alterations and enlargement of existing buildings, and many changes in the use of buildings and land need planning permission.
The Town and Country Planning Acts impose a duty on Local Authorities to control these changes, and this means that a balance has to be found between the need and pressure for change, and the desire to protect the character of settlements and the countryside.
The merits of each application are, therefore, carefully examined.

WHAT ELSE MAY YOU HAVE TO DO ?

Listed Building Consent:	for works to a Listed Building; or for demolition works on land within the curtilage of a Listed Building or within a Conservation Area.
Advertisement Consent:	for the display of advertisements or signs
Building Regulation Approval:	for most new building or construction work.

Special forms are available for these types of applications.

You should also check whether there are any other regulations with which you may need to comply.

WHAT HAPPENS TO THE APPLICATION ?

It will first be checked to see if it is complete and if it is, it will be registered.

Consultations will be carried out with public and other bodies, such as the Highway Authority, or Local Parish Councils.

Publicity may be given to allow local people the opportunity to comment on your proposals.

The application will be considered in relation to the Council's planning policies and guidelines, the past history of decisions on that site or in the locality, other standards (such as parking, or visibility at road junctions), and any other material considerations.

The site will be visited by a Planning Officer You may be asked to submit more information, or to amend your application.

The application will then be considered either by a Planning Committee or Sub Committee (made up of Councillors) or bythe Chief Officerresponsible for planning matters. Objections to an application will be taken into consideration by the Committee or the Chief Officer.

Shortly after the application has been determined, you will receive a Decision Notice.

HOW LONG WILL IT TAKE ?

An application will generally be determined within eight weeks although a longer period may sometimes be required for a complicated application.

WHAT SORT OF DECISION CAN BE MADE ?

Your application may be approved.

Your application may be approved subject to certain conditions. These could impose restictions on the use of land or buildings, or require further details to be approved at a later stage, (e.g. materials or landscaping).
You may appeal against the conditions, but this opens the entire permission to review by the Secretary of State.

Your application may be refused. The reason will be listed on the Decision Notice.

WHAT HAPPENS IF THE APPLICATION IS REFUSED ?

You have the right to appeal against the refusal to the Secretary of State, but you have to do that within six months.
Appeals can be dealt with by written representations by both sides, or by a Public Inquiry.
You may ask the Planning Officer whether an amended application would be more likely to receive planning permission.

DATA PROTECTION ACT 1984
'Information contained in this form is likely to be personal data within the terms of the Data Protection Act 1984, and as such will be held by the Council on computer (such as the PLANAPS applications processing system) and may be used by the Council only for purposes registered under the terms of the Data Protection Act.'

1789/a

SECTION 66 CERTIFICATE

Application No. 22/NOV/2001* 5334

Please fill in both Certificate A, B, C or D and the Agricultural Holdings Certificate. Delete sections not relevant.

(a) "Owner" means a person having a freehold interest or leasehold interest the unexpired term of which is not less than 7 years.

OR

+ See Note (a) to Certificate A

OR

(b) Insert description of steps taken.

(c) Name of local newspaper circulating in the area where the land is situated.

(d) Date of publication (which must be not earlier than the beginning of the period of 21 days ending with the date of the application).

CERTIFICATE A

I certify that:

at the beginning of the ~~period~~ of 21 days ending with the date of the accompanying ~~application~~, nobody, except the applicant, was the owner of (a) ~~of any part~~ of the land to which the application relates.

CERTIFICATE B

I certify that:

~~I have~~/The applicant has* given the required notice to everyone else who, at the beginning of the period of 21 days ending with the date of the accompanying application was the owner (a) of any part of the land to which the application relates, as listed below.

Owner's(a) name	Address at which notice was served	Date on which notice was served
WOKINGHAM DISTRICT COUNCIL	SHUTE END WOKINGHAM BERKSHIRE RG40 1BN	21/11/01.

CERTIFICATE C

I certify that

● I/The applicant* cannot issued a certificate in accordance with either paragraph (a) or paragraph (b) of Section 66(1) of the Act in respect of the accompanying application.

● I have/The applicant has* given the required notice to the persons specified below, being persons who at the beginning of the period of 21 days ending with the date of the application were owners (a) of any part of the land to which the application relates.

Owner's(a) name	Address at which notice was served	Date on which notice was served

● I have/The applicant has* taken all reasonable steps open to me/him/her* to find out the names and addresses of the other owners (a) of the land, or of a part of it, but have/has* been unable to do so. These steps were as follows:

(b) .....

.....

● Notice of the application as attached to this Certificate, has been published in the (c) .....

on (d) .....

1789/b

CERTIFICATE D

I certify that

● I/The applicant cannot issue a certificate in accordance with paragraph (a) of Section 66 of the Act in respect of the accompanying application.

OR

● I/The applicant have/has taken all reasonable steps open to me/him/her to find out the names and addresses of everyone else who, at the beginning of the period of 21 days beginning with the date of application was the owner (a) of any part of the land to which the application relates, but have/has been unable to do so. These steps were as follows:

(b) . . . . . .

. . . . . .

(b) Insert description of steps taken

(c) Insert name of local newspaper circulating in the area where the land is situated.

(d) Insert date of publication (which must not be earlier than the beginning of the period of 21 days ending with the date of the application).

● Notice of the application as attached to this Certificate, has been published in the (c) . . . . . .

on (d) . . . . . ●

ALL APPLICANTS MUST COMPLETE THIS SECTION

If any of the site is part of an area of land which is let or there is an agreement to let the land for agricultural purposes to a tenant, it may be an agricultural holding. Further advice may be obtained from the Department.

Agricultural Holdings Certificate

One or other section must be crossed through as not applicable.

If the applicant is the sole agricultural tenant he or she must delete the first alternative and insert "not applicable" as the information required by the second alternative.

● None of the land to which the application relates is, or is part of, an agricultural holding. ●

OR

● I have/The applicant has given the required notice to every person other than my/him/herself who, at the beginning of the period of 21 days ending with the date of the application, was a tenant of an agricultural holding on all or part of the land to which the application relates, as follows:

Tenant's name	Address at which notice was served	Date on which notice was served

Signed . . . G.V.A. GRIMLEY . . . . . .

On behalf of . . THAMES VALLEY PARK MANCO Ltd . . . . . .

Date . . 20 NOVEMBER 2001 . . . . . .

TOWN AND COUNTRY PLANNING ACT, 1990
TOWN & COUNTRY PLANNING GENERAL DEVELOPMENT ORDER 1988
Certificate under Section 66

EARLEY ... ER STATION NOW THAMES VALLEY PARK

(1) ADDRESS SHEPHERD'S HOUSE LANE PARISH EARLEY/SONNING

PLOT No. THAMES VALLEY PARK DRIVE ORD. SHEET No. SU.7474 (36)

BUILDER MICROSOFT SEE 200 APPLS. WHICH APPLY

Plan No.	Applicant	Description of Development	Date of Decision	Decision
2/49	British Electricity Authority	Greenhouse	8/2/49	App. N/A
U/1/63	Central Electricity Gen. Board	Gas Turbine Gen Stn.	1/4/63	App. App.
U/6/68	" "	Fire Station Building	14.3.68	N/A. App.
U/1/68	" "	2 Storey Maintenance Wk Shop	14.8.68	N/A. C/A
00404	" "	2 GAS TURBINE OIL STORAGE TANKS	16.5.74	N/A C/A
11995	SEE THERMALITE			
24147	ALL SPEYMANK LAND & ESTATES LTD	O/L BUSINESS PARK incl Local Centre COUNTRY/ RIVERSIDE PARK, ROADS ETC	24.9.87	C/A LA
28578	ALL O/L	" IAP, plus 150 bed Hotel	17.9.87	C/A LA
29476	THAMES VALLEY PARK LTD	ACCESS ROAD	4.2.88	C/A
30438	"	FOUL SEWAGE PUMPING STATION TO SERVE T.V. PARK	8.6.88	C/A

DATE OF COMPLETION

MINISTRY DECISION REPLACE EL. KILN STATION

SPECIAL ORDERS 28578 LA - ISSUED - 22.11.88

30114 (BROKENBROW TO EASTERN ROAD) READING CROSS TOWN ROUTE TO WEST (RE BABTIE P. SERVICES) 3.1.89 C/A

30892 " SITE ACC. 6.7.88 30.6.89

(2) THAMES VALLEY BUSINESS PARK

ADDRESS SHEPHERDS HOUSE LANE PARISH EARLEY/SONNING

PLOT No. THAMES VALLEY PARK DRIVE ORD. SHEET No.

BUILDER

Plan No.	Applicant	Description of Development	Date of Decision	Decision
31365	FAIRCLOUGH CIVIL ENG. LTD.	REMOVAL OF SAND & GRAVEL	17.4.90	31.12.90
31867	TV PARK LTD	ACCESS ROAD (29476)	23.11.88	C/A
31928	(SOLD TO) DIGITAL 200 SITE	NEW H.Q.		REF
*33264	(BR. GAS) " PH. I	B1 BLDGS & PARKING	13.6.89	C/A LA
33298	"	MURAL & ADV.	8.4.89	C/A
33533	"	SITE MARKETING SUITE	2.8.89	3 yrs
33545 W/DR.				
33683*	TVP - 400 O/L. PH. II - B1 STATION/ROAD/ETC.		22.12.89	C/A LA
33999	"	SITE OFFICES	3.8.89	C/A
BRA7586	THAMES VALLEY PARK PH. I	3 OFFICE BLDGS. & CARPARKS	14.8.89	REFUSED
35728	" (BR. GAS)	" " (28578)	14.6.90	C/A
35907	"	SIGNS & LETTERING (ILL)	25.7.90	C/A

DATE OF COMPLETION

MINISTRY DECISION

SPECIAL ORDERS * AMEND CLAUSE 8(d) OF AGREEMENT NOV. 88 - 27.6.90

DRAINAGE

091074 37099 - DIGITAL 200 (PH. I) OFFICES/CARPARKING (28578) 20.6.94 C/A LA

(3) ADDRESS THAMES VALLEY PARK PARISH EARLEY / SONNING

PLOT No. THAMES VALLEY PARK DRIVE ORD. SHEET No. SU. 7474 / 36

BUILDER

Plan No.	Applicant	Description of Development	Date of Decision	Decision
37242	(SOLD TO) BRITISH GAS PH.I	~~COVERED WALKWAYS~~ 125, 225, 325	6.3.91	C/A
37308	REDLAND PROPERTIES	BRIDGE & HIGHWAY WORKS	W/DR.	
37309	JOINT APPEAL READING/S.OFF. ASSOC.	WITH TVP - CAVERSHAM LAKES.		
37940	- T.V. PARK LTD. SITE 310	(28578) CLASS B1 USE BLDG.	24.7.91	N/ISSUED C/A
BRA 10255	BRITISH GAS	~~EXISTING~~ OUT 125/ 225/325 & LINKS	~~12-6-91~~ 21.8.91	~~REF~~ APP
38056	T.V. PARK LTD.	LAKE	18.9.91	C/A
38711	" & SHIRE INNS	LOCAL CENTRE (28578)	12.2.92	W/DR → C/A
38871	" O/L.	WATER RESOURCE CENTRE	26.1.94	C/A
BRA 11095	BRITISH GAS BLOCK C	PART FIT-OUT 2nd FLOOR	21.1.92	APP
BRA 11287	" "	"	26.2.92	APP
39242	" "	SATELLITE DISH	8.5.92	C/A

DATE OF COMPLETION

MINISTRY DECISION

SPECIAL ORDERS SEE COMM. AGENDA NOTES 20.6.91 RE L.As.

DRAINAGE

091074

39432	BRITISH GAS	ILL. SIGN	24.6.92	C/A

(4) ADDRESS THAMES VALLEY PARK PARISH EARLEY / SONNING

PLOT No. " " " DRIVE ORD. SHEET No. (36)

BUILDER

Plan No.	Applicant	Description of Development	Date of Decision	Decision
39729	TVP	LOCAL CENTRE } 28578 DAY CENTRE }	~~26.8.92~~ 26.1.94	~~ISSUED~~ C/A LA
40369	RIG DESIGN SERVICES 600	PORTACABIN - OFFICE USE	11.2.93	31.1.95
40511	SPEYMAWK BUSINESS PARKS	BLDG. AS DAY CARE CENTRE / ACCESS / PARKING	12.2.93	C/A
41232	500	ILL. SIGN	11.4.94	REF
42003	TVP LC	RES. MATTERS 28578 FOR L. CENTRE & WIDENING DISTR. ROAD	24.2.94 ~~12.1.94~~	ISSUED C/A LA
XP93/1163	RIG SAW DAY NURSERIES	S/ST. NURSERY UNIT	24.3.93	APP
EP94/2824	"	NEW " " & LINK TO EXISTING	20.9.94	C/APP

DATE OF COMPLETION

MINISTRY DECISION

SPECIAL ORDERS

DRAINAGE

091074

1933 (5)

ADDRESS THAMES VALLEY PARK / THAMES VALLEY PARK DRIVE PARISH EARLEY / SONNING

PLOT No. ORD. SHEET No.

BUILDER

Plan No.	Applicant	Description of Development	Date of Decision	Decision
42879	ORACLE CORPORATION	RE-ALIGNMENT OF SHEPHERDS HOUSE LANE	30.9.94	C/A
42880	" RM.	(RE 28578, 33683) B1 DEV.	~~27~~ 29.9.94	CA
43045	" RM.	LCENTRE, NURSERY, SWIMMING POOL (28578)	29.9.94	C/A
RP94/2627	" "	NEW LOCAL CENTRE	~~27.9.94~~ 9.12.94	REF
		BUILDING / CAR PARKING	09.11.94	C/A
43558	BRITISH GAS 600	NON-ILL. SIGN BOARD		TP
43570	" 600	BLDGS. FOR B1 USE (28578)	22.12.94	C/A
43644	ORACLE (33999 REVOC.)	TEMP. OFFICES, WORKSHOP, STORAGE BLDGS.	13.2.95	28.2.2000 TP
43784	LLC.	MOD. 43045 TEMP COVER SWIMMING POOL	4.8.95	C/A
RP94/3065	" 125/225/325	AMENDS. TO OFFICE & FURNITURE LAYOUT.		
43952 95/60044/HIST	ARGENT REAL ESTATE	REMOVAL SITE MARKETING SUITE.	3.3.95	31.3.2000

MINISTRY DECISION

SPECIAL ORDERS

1933 (6)

ADDRESS THAMES VALLEY PARK / THAMES VALLEY PARK DRIVE PARISH EARLEY / SONNING

PLOT No. ORD. SHEET No. AY-7474(36)

BUILDER

Plan No.	Applicant	Description of Development	Date of Decision	Decision
44023 95/60112/A	ORACLE	3 ILL. SIGNS ON TEMP. BLDG.	27.3.95	C/A
44096 95/60145/RM	ARGENT REAL ESTATE 300 (28578 + 33683)	400 B1 DEV.	26.6.95	C/A
RP95/3265	ORACLE 510	NEW OFFICE BUILDING	17.3.95	REF
44444 95/60533/R	BRITISH GAS 600 600	30M LIGHTING MAST	10.7.95	REF
RP95/3382	" 600	3/St OFFICE DEV. - ATRIUM SPACE - S/SE LINK TO E. BUILDING	~~23.9.95~~ ~~2.8.95~~ 18.1.96	REF
44587 95/60676/A	ORACLE LC	OFFICE, RESTAURANT, PARKING	26.9.95	C/A
44650 95/60739/A	ORACLE	SITE SIGN BOARD	13.9.95	C/A

MINISTRY DECISION

SPECIAL ORDERS

1933 (7)

THAMES VALLEY PARK

ADDRESS THAMES VALLEY PARK DRIVE PARISH EARLEY / SONNING

PLOT No. ORD. SHEET No. SU 7474 36

BUILDER

Plan No.	Applicant	ILL	Description of Development	Date of Decision	Decision
44672 95/60761/A	DAVID LLOYD LEISURE	3	SIGNS FOR LOCAL CENTRE - LOGOS	19.9.95	C/A
44696 95/60785/VAR	DIGITAL	200	(28578) VAR. CONDS. 3 & 5. RM. & COMMENCEMENT - 7 YRS.	26.9.95	C/A
44824 95/60915/RM	BR. GAS	600	S/ST. LINK BLDG. MOD. OF 43570	10.10.95	C/A
44825 95/60961/RM	W/DR.	600			
FP 95/3640A	DAVID LLOYD LEISURE		PLANT ROOM EXT AT FITNESS CENTRE	~~21.7.95~~ 14.9.95	REF
FP 95/3319A	BRITISH GAS	100	INT. ALTS.	1.8.95	REF
FP95/3673	DAVID LLOYD FITNESS CENTRE		FITTING OUT	3.8.95	C/APP
44919 95/61010/A	ARGENT		2 ILL SIGNBOARDS	20.11.95	C/A

MINISTRY DECISION

SPECIAL ORDERS

1933 (8)

THAMES VALLEY PARK

ADDRESS THAMES VALLEY PARK DRIVE PARISH EARLEY / SONNING

PLOT No. SITE 200 = MICROSOFT CAMPUS ORD. SHEET No. SU 7474 36

BUILDER

Plan No.	Applicant		Description of Development	Date of Decision	Decision
45194 95/61286/A	ARGENT	400	ILL-SIGN	9.1.96	C/A
FP95/3956	ORACLE		PILING FOR BOTH BUILDINGS	23.10.95	APP
95/63065/VAR	MICROSOFT LTD.	200	VAR. CONDS 3 & 5 (28578) TIME LIMIT	13.3.96	C/A
FP95/3918	DAVID LLOYD LEISURE plc		REMOVABLE WINTER POOL COVER & SUPPORT	9.11.95	REF
95/63142/R	MICROSOFT	200	PHT 3 BLDGS. (28578) 3 BLDGS.	28.3.96	C/A
95/63197/RM	ARGENT	300	B1 DEV (28578)	10.4.96	C/A
96/63256/RM	ORACLE	540	APPROVAL RM. 28578/33683 & O/L FURTHER FLOOR SPACE	11.4.96	C/A
96/63294/A	ORACLE		ILL. LETTERS ON OFFICE BLDG.	26.3.96	C/A
FP/3265/R	"	510	NEW OFFICE BUILDING	10.4.96	REF
FP 95/63567/RM	BRIT. GAS	600	MOD. OF 43570	27.6.96	C/A

MINISTRY DECISION

SPECIAL ORDERS

FP 96/5701A MICROSOFT 3 x 4/ST. BLDGS ~~22.3.96~~ 16.7.97 APP REF

1933

(9) THAMES VALLEY PARK

ADDRESS THAMES VALLEY PARK DRIVE PARISH EARLEY/SONNING

PLOT No. SITE 300/BLDG.1 ARGENT = MILLENIUM HOUSE ORD. SHEET No. SU 7476 96

BUILDER " 300 BUILDING 2 = COLORADO HOUSE

Plan No.	Applicant		Description of Development	Date of Decision	Decision
EP96/5444	ARGENT	300	2+3/St OFFICE BLOCK	22.11.96	REF
96/64434/E	ORACLE & ARGENT		WALL AS ENTRANCE FEATURE	1.11.96	C/A
EP96/5628/A	"	520	3/St OFFICE BLDG. & CAR PARK	21.2.97	C/A
96/64561/E		No.1-LC	ELECTRICITY SUB-ST. RUBBISH STORE ENCL.	10.02.97	C/A
96/64631/E	DAVID LLOYD FITNESS CENTRE		4 SQUASH COURTS, CH. ROOMS	10.02.97	C/A
96/64703/RM	ORACLE	540	B1 Dev (28578 & 33683)	14.02.97	C/A
EP96/5869/A	ORACLE	530	3/St. OFFICE BUILDING & CARPARK	20.3.97	REF
EP96/5874	COUNTRYSIDE COMM.	1	2/St. " CARPARK	19.12.96	C/APP
EP96/5979/A	MICROSOFT		FITTING OUT	11.02.97	REF
97/65166/A	ORACLE	520	ILL. FASCIA LETTERS	15.4.97	C/A
97/65167/RM	"	540	LANDSCAPING (28578/33683)	28.4.97	C/A
97/65265/RM	ARGENT	420	B1 Dev. (28578/33683)	9.5.97	C/A
EP97/6065	"	560	4/St OFFICE BLDG. PARKING	12.03.97	REF

MINISTRY DECISION

SPECIAL ORDERS

1933

(10) THAMES VALLEY BUSINESS PARK

ADDRESS THAMES VALLEY PARK DRIVE PARISH EARLEY/SONNING

SITE 420 - Thompson House

PLOT No. SITE 420 - TV3 ACC. TO L.C. SEARCH PLAN ORD. SHEET No.

BUILDER SITE 400 - TV5 = REGUS HOUSE (NAMED 19-8-98)

Plan No.	Applicant		Description of Development	Date of Decision	Decision
97/65809/F	ORACLE	550	B1 BUILDING	24.12.98	C/A
97/65964/RM	ARGENT	420	" " (28578/33683)	1.9.97	C/A
97/65993/A	LGL PROPERTIES	300	ILL. SIGN TV1	29.8.97	C/A
97/66148/RM	BG Property Div	600	Chiller Compound (amend to 43570)	11.12.97	C/A
97/66194/A	ORACLE	530	ILL. LETTERS ON BUILDING	7.11.97	C/A
EP97/6325	ICL	300	INT. FIT-OUT TV1	13.6.97	APP
97/66302/RM	ARGENT	410	B1 BUSINESS DEV.	3.11.97	C/A
97/66303/RM	"	" 400	"	3.11.97	C/A
97/66348/T	BG PROPERTY DIV.	600	(RETRO) TEMP. STAFF BLDG.	21.11.97	C/A
97/66434/RM	MICROSOFT	200	PH.II 2 B1 BUILDINGS	4.3.98	C/A
97/66465/A	COMPUTACENTRE	LC1 (1)	2 x 8M. high Flag Poles	28/11/97	C/A
97/66467/A	MICROSOFT	200	Ill. signs & 2 Fascia Signs	28/11/97	C/A
97/66483/A	ICL	300 - TV1	Erec. of Non-ill. Fascia Sign	21/11/97	REF

MINISTRY DECISION

SPECIAL ORDERS

97/66571/A COMPUTACENTRE LC1 Illuminated Signs 16.12.97 C/A

1933

(11)

ADDRESS THAMES VALLEY BUSINESS PARK
THAMES VALLEY PARK DRIVE PARISH EARLEY / SONNING

PLOT No. ORD. SHEET No.

BUILDER

Plan No.	Applicant		Description of Development	Date of Decision	Decision
97/66696/F	ARMLEY INV. PROP. ADVISORS		SECURITY BLOCK	18.3.98	C/A
FP97/6055A	ORACLE	540	4/St. OFFICE BLDG. + PARKING	25.7.97	Ref
FP97/6567	BG PROPERTIES	600	FIT-OUT	22.8.97	C/App
FP97/6543	ARGENT	420	OFFICE DEV	31.12.97	C/App
97/66805/A	BG PROP. DIV	600	ILL. DIR. SIGNS	26.1.98	C/A
FP97/6055B	ORACLE	540	4/St. OFFICE BLDG.	6.1.98	App
FP97/6601	BG	600	FF BLOCK ABC	1.9.97	C/App
FP97/6603	ORACLE	520	RESTAURANT + KITCHEN ETC	4.9.97	Ref
FP97/6619	"	520	FIT OUT	3.9.97	C/App
FP97/6625	"	530	"	3.9.97	C/App
FP97/6709	BGAS	600	TEMP. MARQUEE + KITCHEN CABIN	3.9.97	C/App
FP96/5874		TVI			
FP97/6769	MACE LTD	600	PREFAB. LINK TO FORM ONE BUILDING ALOT	12.9.97	App

MINISTRY DECISION

SPECIAL ORDERS

1933

(12)

ADDRESS THAMES VALLEY BUSINESS PARK
THAMES VALLEY DRIVE PARISH EARLEY / SONNING

PLOT No. ORD. SHEET No.

BUILDER

Plan No.	Applicant		Description of Development	Date of Decision	Decision
FP97/6763	ORACLE	540	FIT OUT	9.10.97	C/App
FP97/6767	"	530	"	9.10.97	C/App
98/66953/F	"		PORTACABIN	16.7.98	C/A
98/66966/A	"	540	ILL. SIGNS	27.2.98	C/A
97/66805/A	BG		ILL. DIR. SIGNS	26.1.98	C/A
98/66997/A	ICL	300 TVI	RETRO - LOAD SIGN	9.3.98	C/A
98/67008/A	PEARCE SIGNS	300	" ILL + NON-ILL SIGNS	9.3.98	C/A
98/67056/V	MICROSOFT	200	VAR. CONDS. 3 & 5 ON 29578 (EXT. OF TIME FOR RM + COMM. OF DEV. FROM 6 TO 10 YRS. B.1(a)	2.4.98	C/A
98/67066/A	BG	600	~~2 FLAGPOLES~~	1.4.98	C/A
98/67071/RM	"	600	CHILLER COMPOUND / REVISED PARKING LAYOUT	7.7.98	C/A

MINISTRY DECISION

SPECIAL ORDERS

1933 (13)

ADDRESS THAMES VALLEY BUSINESS PARK THAMES VALLEY DRIVE PARISH EARLEY/SONNING

PLOT No. ORD. SHEET No.

BUILDER

Plan No.	Applicant	Description of Development	Date of Decision	Decision
FP97/7061/B	ORACLE 550	3 ST OFFICE BLDG.	~~14.1.98~~ 11.1.98	REF APP
FP97/7154	" 540	FIT-OUT	17.2.98	REF
FP97/7162	ARGENT	3/ST OFFICE BLDG. ACCESS/PARKING	24.2.98	REF
FP97/7154/A	ORACLE 540	FIT-OUT	2.4.98	C/APP
FP97/7061/A	"	3/St Office Bldg.	14.4.98	REJ.
98/67787/T	British Gas 600	(RETRO) TEMP. OFFICE BLDG.	20.10.98	C/A
98/67966/LM	CANCELLED 410 & 400	ADD. PLANS TO MEET	CONDITION 66302/3	ONLY ON
FP98/7607	ORACLE 540	LITTING OUT	18.6.98	APP
FP98/7688	" 550	Office fit out & Int. Partitioning	24.07.98	APP
98/68384/F	Vodafone Ltd	Antennae in 3 flags (Sep. appl.) Compound & Assoc. Equipment	19.1.99	C/A
98/68391/F	MICROSOFT 200			
FP98/7652	Grimley International	New Security Bldg.	30.6.98	APP
98/68429/Adv.	Vodafone Ltd	Erect 3 Flag Poles	19.1.99	C/A

SPECIAL ORDERS

FP97/7162/B Argent Development - Office dev. 3-4St. Buildings 23.06.98 REF

1933 (14)

ADDRESS THAMES VALLEY BUSINESS PARK THAMES VALLEY DRIVE PARISH EARLEY/SONNING E

PLOT No. ORD. SHEET No.

BUILDER

Plan No.	Applicant	Description of Development	Date of Decision	Decision
FP97/7162/B/A	Argent Development	Office dev. 3-4St Bldings	23.6.98	
98/68647/A	Regus 400	Int. Ill Fascia Signs	31.12.98	C/A
98/68686/VAR	MICROSOFT 200	Var of Cond. 3 & 5 of 28578*	8.2.99	C/A
98/68731/A	Oracle Corp.	3 Int. Ill. Signs	19.1.99	C/A
FP97/6543/A	Argent Development	Office development	5.11.97	REF
99/69147/F	Wokingham District Council	building use as waterside centre	9/4/99	C/A
99/69238/A	Druid Group PLC	Erect Ext. Ill office signs	28/4/99	C/A
99/69489/F	Grimley Int. Prop. Advisors	Erect Security Bldg.	16/6/99	C/A
FP97/7162/C	Argent Development	Office development	24.08.98	REF
FP97/7162/D	"	Office dev. 3 & 4 storey Bldgs - sep. access/parking	12.10.98	APP
FP98/8179	Oracle Corp. (UK) Ltd.	Inst. of Kitchen fac.	9.12.98	C/A E
FP98/8213	Regus	Internal fit-out.	18/1/99	APP
FP98/8263	Druid Group PLC	Fit out of ground & F/F	5/2/99	APP

MINISTRY DECISION

SPECIAL ORDERS

* Allow Res. Matters to submitted within 12 yrs of orig. cons. & allow com. of dev. extended to 11 yrs

1933

(15)

THAMES VALLEY BUSINESS PARK.

ADDRESS THAMES VALLEY DRIVE. PARISH EARLEY / SONNING.

PLOT No. ORD. SHEET No.

BUILDER

Plan No.	Applicant	Description of Development	Date of Decision	Decision
FP99/8372	SIMON WILSON ORACLE CORP.	INT. PARTITIONING.	26/2/99	APP
FP99/8390	COLORADO HOUSE.	INT. ALT'S.	17/3/99	C/A
FP99/8461	ORACLE CORPORATION.	PARTITIONING.	20/4/99	APP
FP99/8764	MICROSOFT Ltd 200	REFURB (STAFF REC. AREA).	3/6/99	APP
FP99/8920	Regus House 400	Remove partitions	23/7/99	APP
FP99/8916	WDC	New watersports centre	19/8/99	REF
99/70485/F				
FP99/9127	Microsoft Ltd.	office refurbishment (boardroom) Bldg 2	5/10/99	APP
FP99/8916/A	W.D.C.	Watersports centre + ext. wks	11/10/99	APP
[illegible]/70836/V	Microsoft Properties	Variation to Cond 3 + 5	25/2/00	C/A
99/70856/F	David Lloyd Leisure	of Consent 28578 2 St Ext Car Parking + Int. Alts.	4/7/00	C/A

MINISTRY DECISION

C/69489/10	Grimley Int. Prop. Advisors	D.to.C. - Appl of Soil Investigations	26/1/00	APP

1933

(16)

Thames Valley Park

ADDRESS Thames Valley Park Drive PARISH Earley / Sonning

PLOT No ORD. SHEET No.

BUILDER

Plan No.	Applicant	Description of Development	Date of Decision	Decision
F/2000/0952	Oracle Corporation	Prop erect of building for use as [illegible]	21.06.00	~~APP~~ C/A
F/2000/1174	Bg International (600)	Air cond. units on roof Building D2, SITE 600	21.06.00	C/A
FP99/9126	MICROSOFT Ltd	office refurbishment (visitor toilets refreshment bar)	19.10.99	APP N/A
FP/2000/0458	Morgan Lovell	Int. Partitions & minor M. & E Alts	22.5.00	C/A
FP/2000/0463	Geoffrey Allen Assoc.	Redev. of Marketing Suite	22.5.00	REF
F/2000/1929	Berkshire Watersports			
F/2000/2324	Microsoft.	S/St - link between 3 & 4 & coffee bar [illegible] 4	29.11.00	APP
TL/2000/2461	B T Cellnet			
RM/2000/2543	Microsoft Ltd	Erect of B1 Office accom. & anc. use (Amend. to 97/66434)	30.11.00	APP
~~TP/2000/2964~~				
RM/2001/3310	"	App of RM. OA 28578 for the erect of B1 office accom. & ancillary use (amend to 2543)	21.03.01	C/A
A/2001/4234	unit 42D	Erect int. illum. signs	21.9.01	C/A
F/2001/4441	B. G. Group	erect natural gas filling station for co. vehicles	5.9.01	C/A

MINISTRY DECISION

SPECIAL ORDERS PD Eng - Satellite Dishes - 15/8/00 - Gregory

1933 (17)

ADDRESS THAMES VALLEY PARK PARISH EARLEY/SONNING

PLOT No. ORD.SHEET No.

Planning No.	Building No.	Applicant	Description of Development	Date	Decision	
					Building	Planning
TP/2000/2964		BG Group Lease	T.P. for portable bldg. to computer equip. ancillary to main bldg.	21.9.01		C/A
~~F~~/2001/5334.		Thamesvalley Park Nanco Ltd.	Erect CCTV on 6m mast	16.1.02.		CIA
F/2002/6080.		Railtrack.	new station, 4 platforms & linking footbridge			

MINISTRY DECISION:

SPECIAL ORDERS:

Wokingham Waterside Centre, Thames Valley Park, Earley, Berkshire RG6 1AG

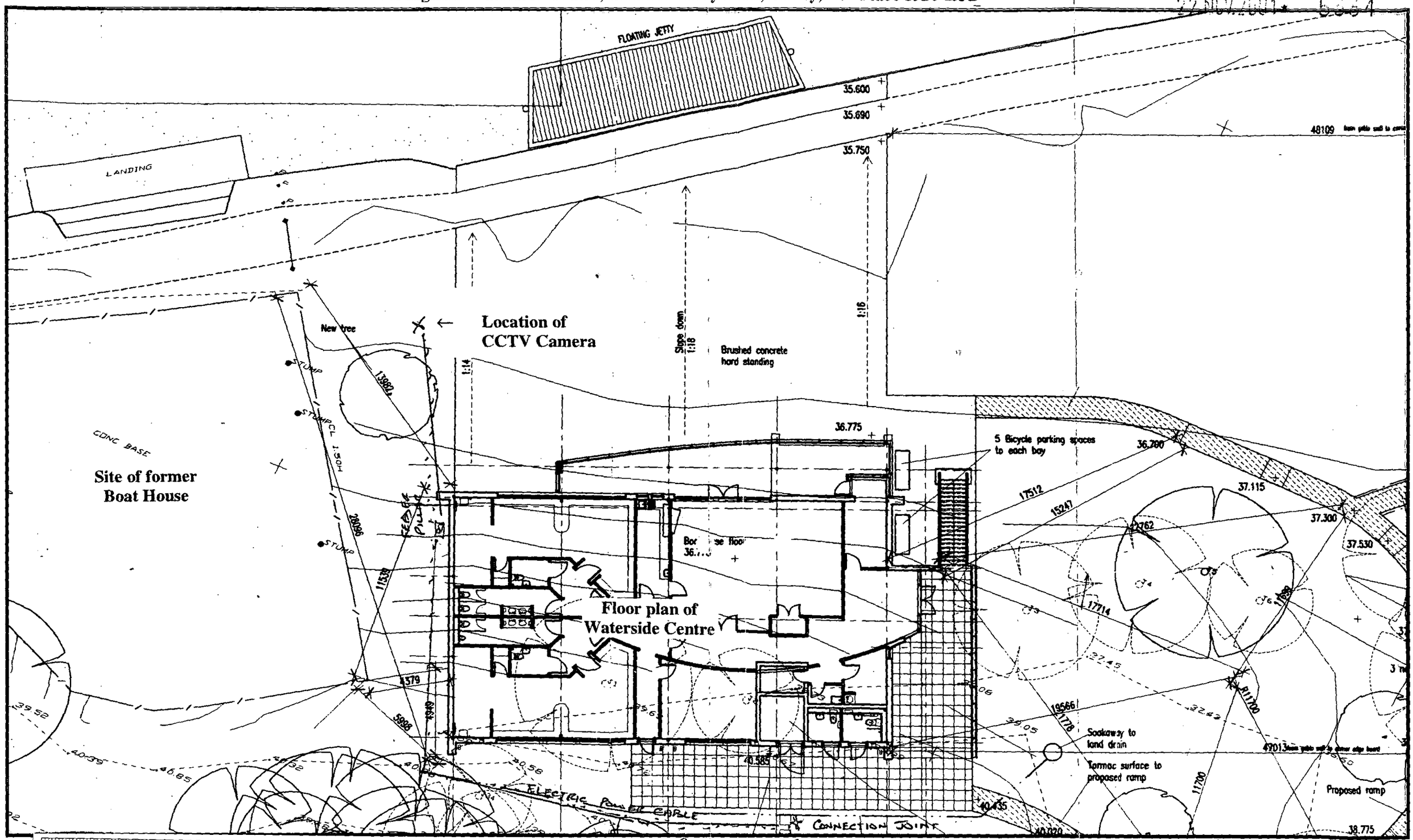

SCALE - 1:200

Block Plan – Ref: 07A112801/02
For indicative purposes only

APPROVED

GVA Grimley
International Property Advisers
University Gate, Park Row
Bristol BS1 5UB
Telephone 0870 900 89 90
www.gvagrimley.co.uk

Wokingham Waterside Centre, Thames Valley Park, Earley RG6 1AG

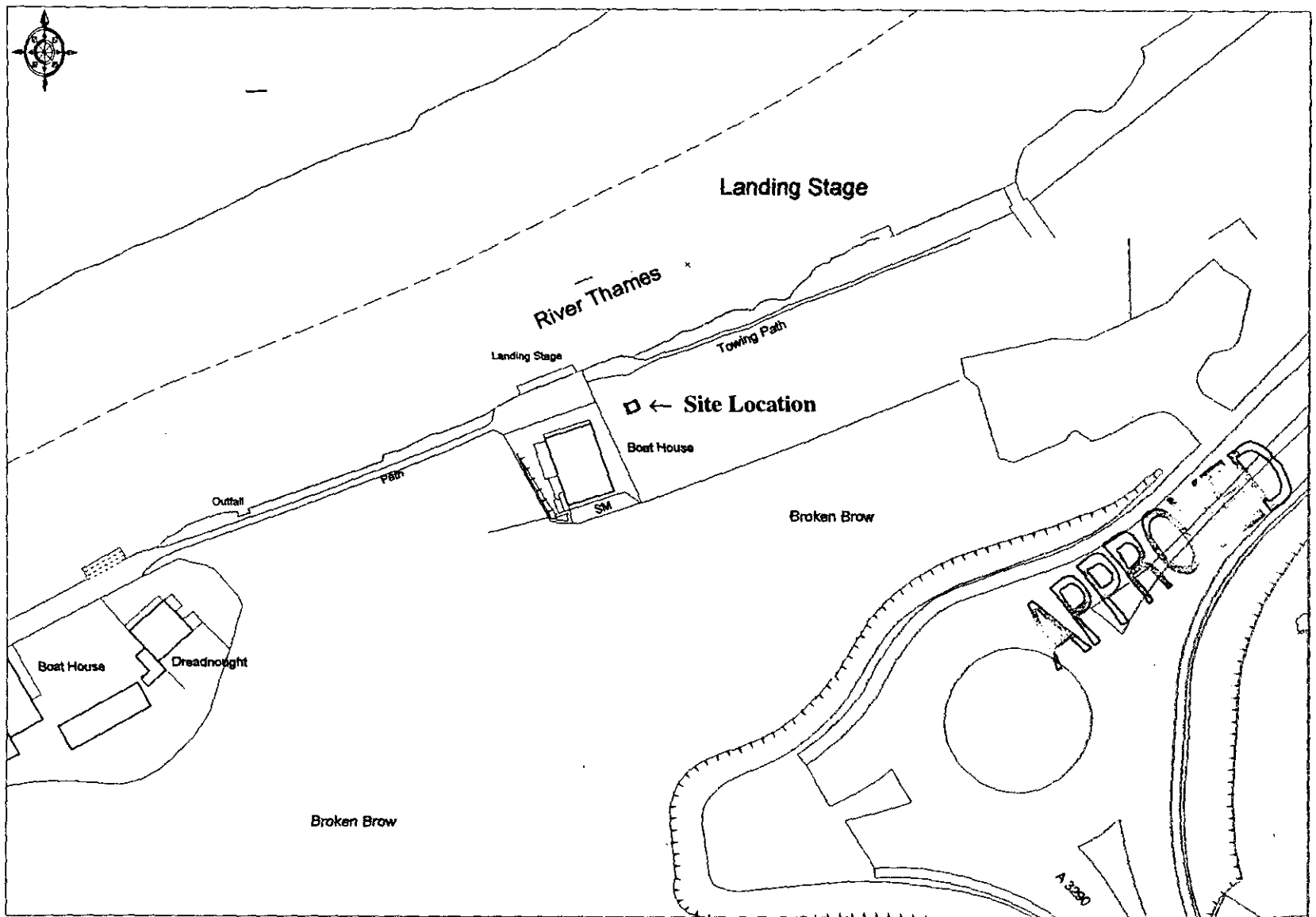

© Crown copyright 2001. All rights reserved. Licence Number 100020449. Survey Scale - mixed Plotted Scale - 1:1250

Site Location Plan - Ref: 07A112801/01

GVA Grimley

22.NOV.2001 * 5334

22.NOV.2001* 5334

ACC range 4.5-9 metres

Fixed and tilt-down camera columns



Altron columns are a cost effective general duty range of modular construction for ease of handling and installation – tilt-down columns lock internally.

Standard equipment

Camera mounting bobbin, anchor bolts and templates where applicable, secure lockable access on tilt-down models.

Features

- Columns provide a secure installation
- Columns are modular for ease of transport and installation
- Tilt-down option for easy access and servicing of camera equipment at ground level by one man
- *Tilt-down columns up to 6m easily installed by hand – ideal for inaccessible locations*
- Durable and low maintenance – all materials and components are non corrosive
- Stable mounting for dome or pan and tilt CCTV cameras
- Manufactured in heavy sections for maximum rigidity
- Demountable winches for secure installation and reduced cost on multiple installation
- Full range of Altron accessories for a complete and professional installation

Design & Manufacturing Standards

- Manufactured from high tensile steel to BS 4360 43C/50C/43A, EN 10219, S275J2H, S355J2H
- Hot dip galvanized to BS 729 (1971), ISO 1461 (1999) after fabrication
- Poles painted in BS and RAL colours to BS 4800
- Welding procedures conform to BS 5135
- Design wind loadings based on CP3 Chapter V Pt 2 (1972) & BS 6399 Pt 2 (1997)

Accessories & Options

- All fixed camera bracketry from Altron accessories range
- Anti climb guards
- Telemetry receiver box mounting brackets and plates – clamp on
- Swan necks for dome camera mounting
- Column mounting bracketry for fixed/PTZ cameras and PIR detectors
- Columns can be manufactured to exact height requirements

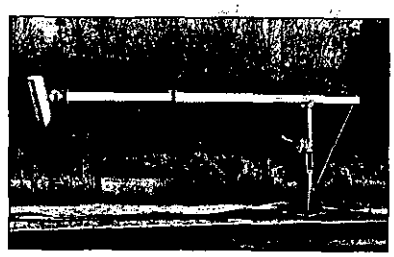

Special requirements and technical support

If you have a specific requirement or application we will be pleased to assist in drawing up specifications as well as offering experienced technical support and advice on suitability.

APPROVED

ALTRON

Altron Communications Equipment Ltd
Heol Parc Mawr, Cross Hands Business Park, Cross Hands, Llanelli SA14 6RE
Tel: 01269 831431 Fax: 01269 845348 E-Mail: comms@altron.co.uk www.altron.co.uk

ACC range

Technical Specification

Fixed and tilt-down camera columns

12.NOV.2001

Model no	Height	Post type	Post size A	Lower section B	Upper section C	Extension length D	Gussett thickness H	BP thickness T	Door height E	Door width F	Column rear clearance when tilting G	Weight kgs
ACC1	4.5m	FB	–	100x100	–	–	6	10	205	90	–	84kgs
Standard		PM	120x120	100x100	–	–	6	10	285	110	1700	140kgs
		BP	120x120	100x100	–	–	6	10	285	110	1700	160kgs
ACC2	6m	FB	–	120x120	90x90	1500	6	10	205	110	–	148kgs
Standard		PM	120x120	100x100	80x80	1500	6	10	285	110	1700	152kgs
		BP	120x120	100x100	80x80	1500	6	10	285	110	1700	173kgs
ACC2HD	6m	FB	–	150x150	100x100	1500	6	10	285	140	–	185kgs
Heavy Duty		PM	120x120	120x120	90x90	1500	6	10	285	110	1700	165kgs
		BP	120x120	120x120	90x90	1500	6	10	285	110	1700	186kgs
ACC3	7.5m	FB	–	150x150	120x120	3000	6	20	285	140	–	213kgs
Standard		PM	150x150	120x120	100x100	3000	6	22	335	140	2000	210kgs
		BP	150x150	120x120	100x100	3000	6	22	335	140	2000	250kgs
ACC3HD	7.5m	FB	–	200x200	150x150	3000	6	20	335	185	–	297kgs
Heavy Duty		PM	150x150	150x150	120x120	3000	6	22	335	140	2000	260kgs
		BP	150x150	150x150	120x120	3000	6	22	335	140	2000	279kgs
ACC4	9m	FB	–	150x150	120x120	4500	8	20	285	140	–	254kgs
Standard		PM	150x150	150x150	120x120	4500	8	22	335	140	2000	298kgs
		BP	150x150	150x150	120x120	4500	8	22	335	140	2000	333kgs
ACC4HD	9m	FB	–	200x200	150x150	4500	10	20	335	185	–	347kgs
Heavy Duty		PM	200x200	200x200	150x150	4500	10	22	335	185	2400	405kgs
		BP	200x200	200x200	150x150	4500	10	22	335	185	2400	440kgs

All dimensions in mm unless otherwise stated.

Generally we recommend the following:

Light Duty

- Fixed camera/light to medium pan and tilt applications

Heavy Duty

- Heavy duty fully functional PTZ application or where minimum movement is required

Demountable autobraking winches:

ACC 1 – 2	DW1000
ACC 3	DW1500
ACC 4	DW2500

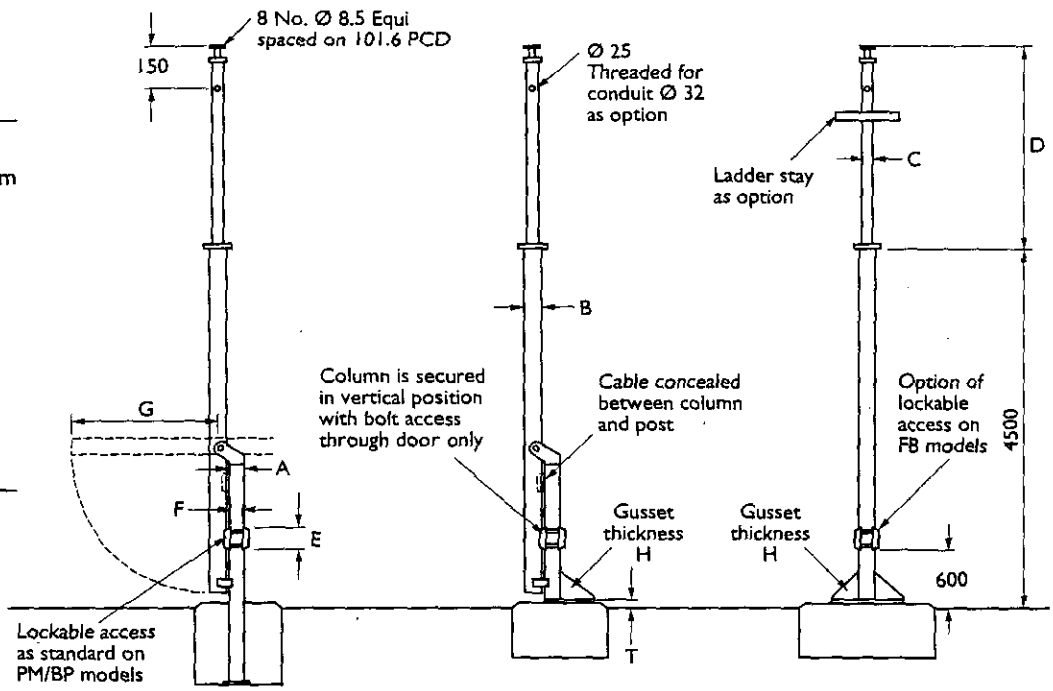

Post Mount PM **Base Post BP** **Fixed Base FB**

Accessories & Options

- All dome, fixed and pan/tilt camera mounting bracketry
- Knuckle for single fixed camera PTS 1
- Twin mount with knuckles TB2 – 600f
- *Twin mount for PTZ* TB2 – 1000
- Anti climb guards SCC
- Telemetry RX brackets ATBC
- Lockable access – FB only LA
- Bracketry for mounting PIR's
- Cages for column top
- *Clamp on camera mounting* bracketry

APPROVED

Followed by Column No. e.g. SCC1 for ACC1FB

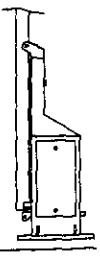

Combined cabinet base option for tilt down columns. Ref. AW1697

Altron Communications Equipment Ltd Tel: 01269 831431 Fax: 01269 845348

Due to our policy of continuous product improvement, specifications may change without notice.

Type 506

22.NOV.2001 5334

Dennard

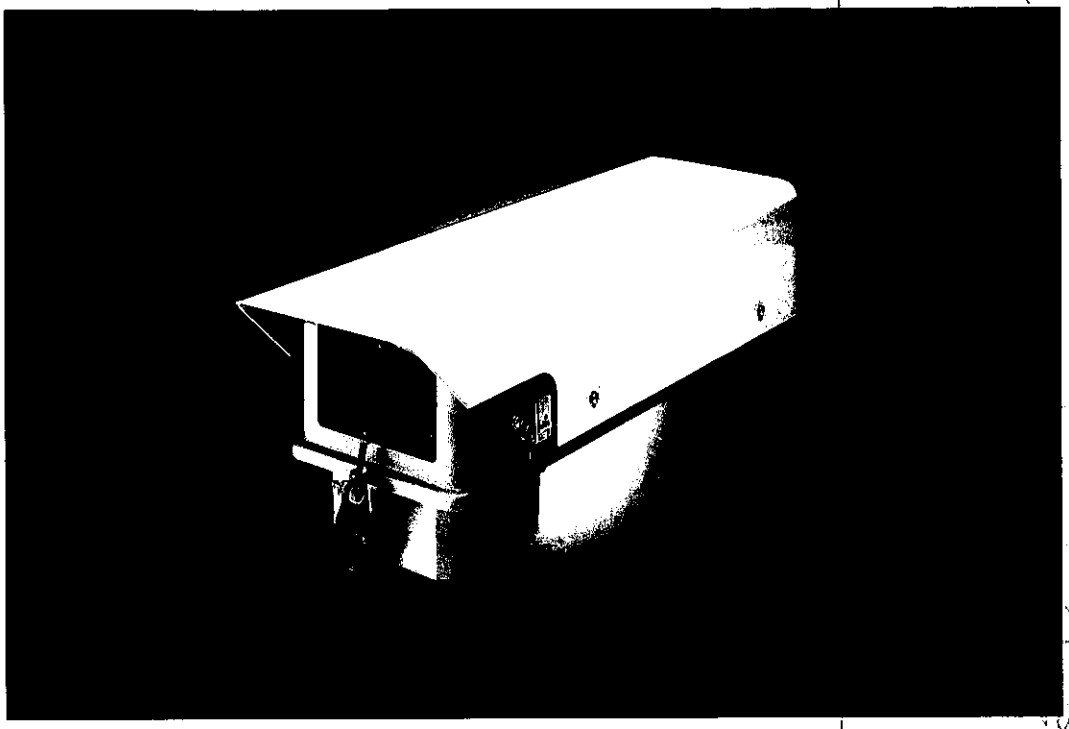

Description

Type 506
The type 506 housing is specifically designed to accommodate a range of C.C.D. cameras.
The enclosure incorporates a removable top cover for camera access, similar to our type 515 housing.
Units are constructed from zintec sheet, powder coated and stoved. In addition an insulated camera platform is provided with horizontal and vertical adjustment, float glass window, heater, 2 cable glands and stainless steel fittings offering environmental protection to IP65 of BS.EN 60529.

Features

1. Constructed from zintec sheet, powder coated & stoved.
2. Three latch cover retention.
3. Horizontal and vertical camera platform adjustment.
4. Window heater & thermostat
5. Two cable gland entries
6. Stainless steel fixings.
7. Weatherproof.
   - BS.EN 60529 Level IP65 (no water ingress)

Build Options

/ATS Anti-tamper switch.

/W Wiper.

/VR Vandal resistant catches.

DENNARD SUPPORT LINE +44 (0) 1252 614884
Fax: 01252 626013

Type 506

All Dimensions in millimetres

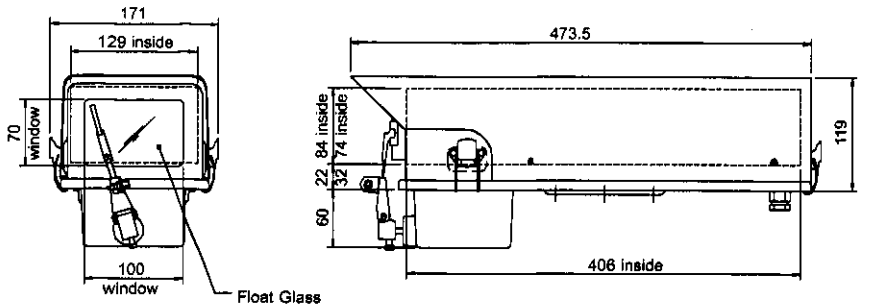

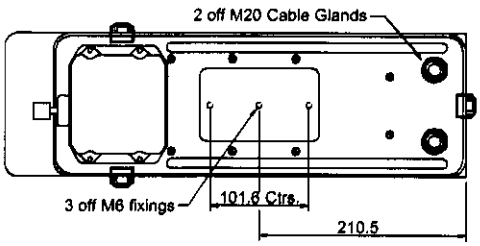

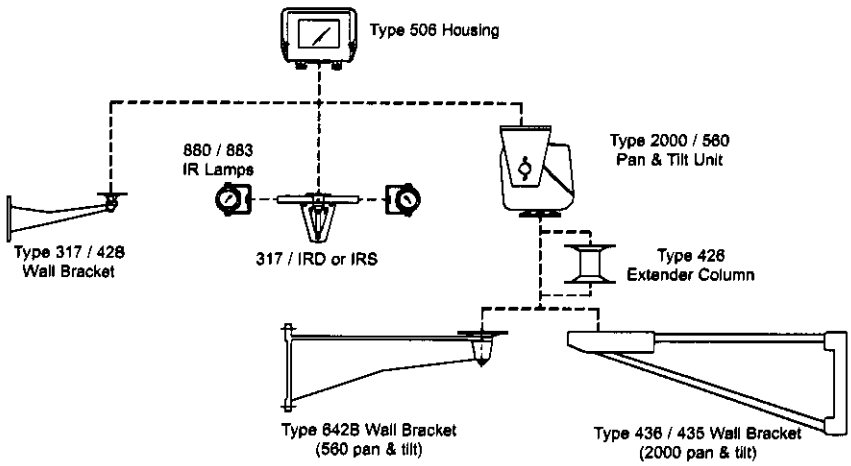

Specifications

Material:	Zintec sheet.
Finish:	Powder coated and stoved.
Weight:	2.6kg
Weight with Wiper:	3.1kg
Heater Voltage:	12V or 24V
	110V or 230V
Power Consumption:	12 VA (12V - 14VA)
Power Consumption with wiper:	16 VA.

Dennard

55 Fleet Road, Fleet, Hants, England. Tel: 01252 814884 Fax: 01252 628013

Web Site Address: www.dennard-cctv.com

CE