DOCUMENTS FOR SCANNING

☐ Decision Notice

☐ Application Form

☐ Officer Report

☐ Conditions

☑ Plans

Other

☐ Confidential

APPLICATION NUMBER: LB/2000/3044

SITE ADDRESS: CRAIGS HALL, CRAIGS HILL WARGRAVE

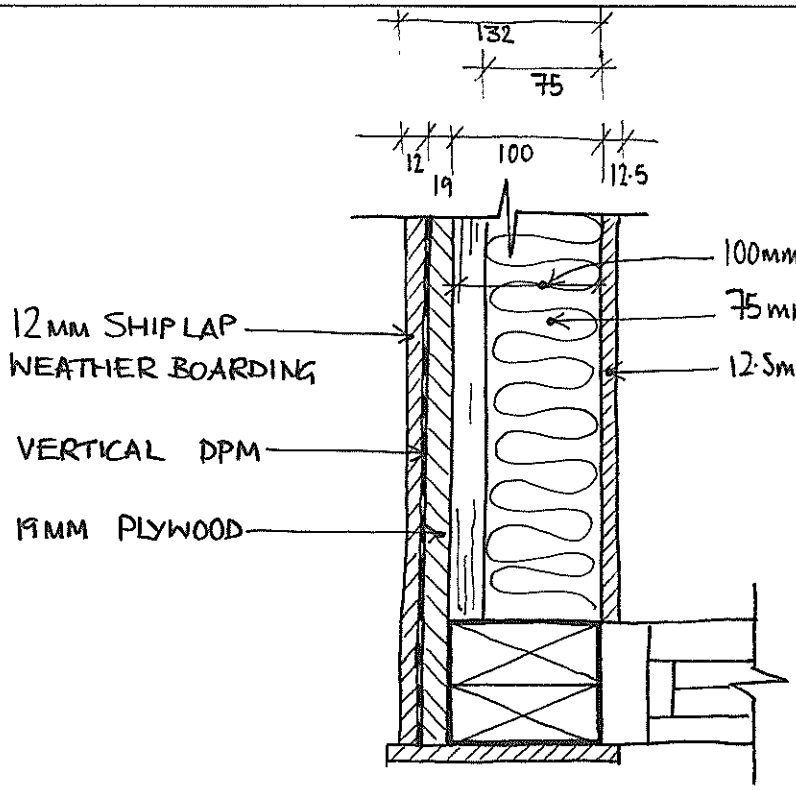

SECTION THRO DORMER CHEEK 1:5



TAKEN : 26/03/02

REF	DATE	REVISION	DRAWN	CHECKED

DRAWING: DORMER DETAIL

PROJECT: CRAZIES HALL WARGRAVE

CLIENT: MR R SMEE

SCALE: 1:5

DATE: APRIL 02

DRAWN BY: NJP

CHECKED BY: JR.

DRG NO: 200179 SK 101

REV: 1

FILE REFERENCE:

RIDGE
BEAUMONT HOUSE
59 HIGH STREET
THEALE
READING, RG7 5AL
TEL: 0118 932 3088
FAX: 01865 268701
E-mail: mail@ridge.co.uk
http://www.ridge.co.uk
Also at Oxford, Bristol and London

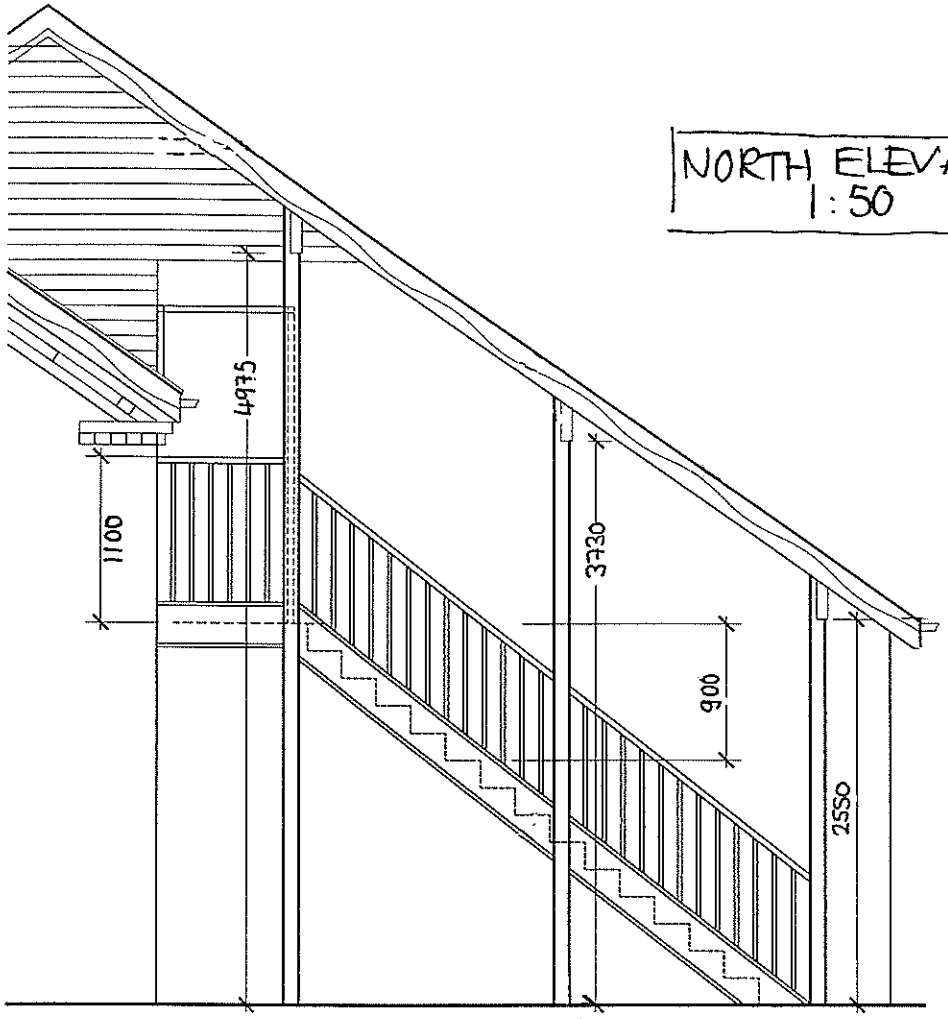

NORTH ELEVATION
1:50

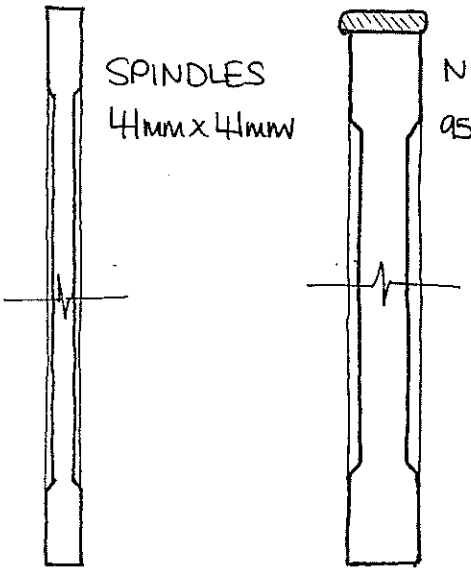

SPINDLES
41mm x 41mm

NEWEL POST
95mm x 95mm



SECTION THRO SPINDLE & NEWEL POST



SECTION THRO HANDRAIL



SECTION THRO BASE RAIL

REF	DATE	REVISION	DRAWN	CHECKED

DRAWING
STAIRCASE DETAILS

PROJECT
CRAZIES HALL
WARGRAVE

CLIENT
MR R SMEE

SCALE NTS
DRAWN BY NJP
DATE MAY02
CHECKED BY
DRG NO 200179 SK102
REV
FILE REFERENCE

RIDGE
BEAUMONT HOUSE
59 HIGH STREET
THEALE
READING, RG7 5AL
TEL: 0118 932 3088
FAX: 01865 268701
E-mail: mail@ridge.co.uk
http://www.ridge.co.uk
Also at Oxford, Bristol and London

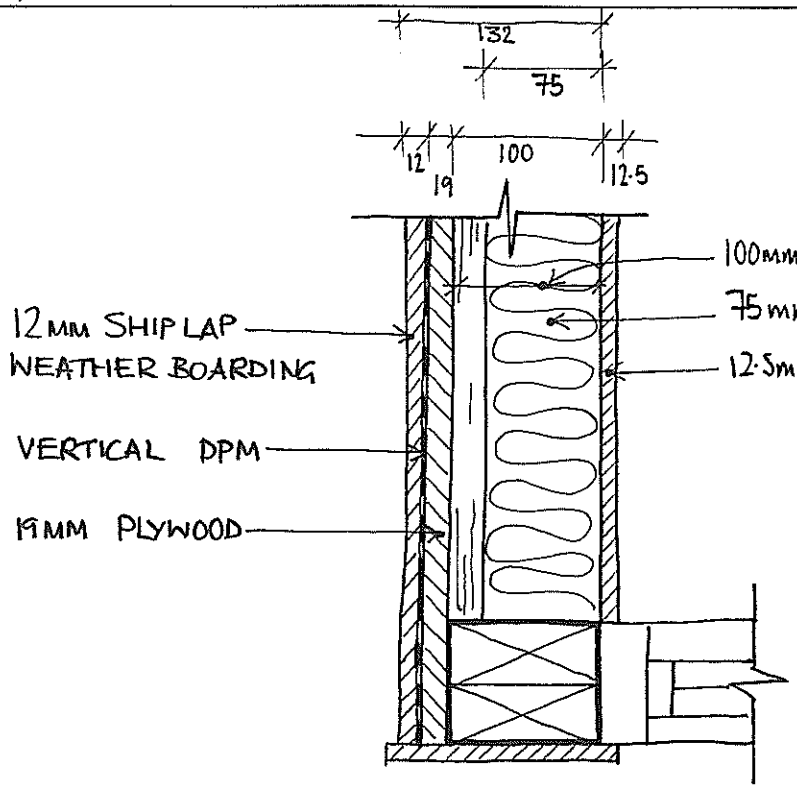

SECTION THRO DORMER CHEEK 1:5



TAKEN : 26/03/02

REF	DATE	REVISION	DRAWN	CHECKED

DRAWING: DORMER DETAIL

PROJECT: CRAZIES HALL WARGRAVE

CLIENT: MR R SMEE

SCALE: 1:5

DATE: APRIL 02

DRAWN BY: NJP

CHECKED BY: JSR.

DRG NO: 200179 SK 101

REV: 1

FILE REFERENCE:

RIDGE
BEAUMONT HOUSE
59 HIGH STREET
THEALE
READING, RG7 5AL
TEL: 0118 932 3088
FAX: 01865 268701
E-mail: mail@ridge.co.uk
http://www.ridge.co.uk
Also at Oxford, Bristol and London

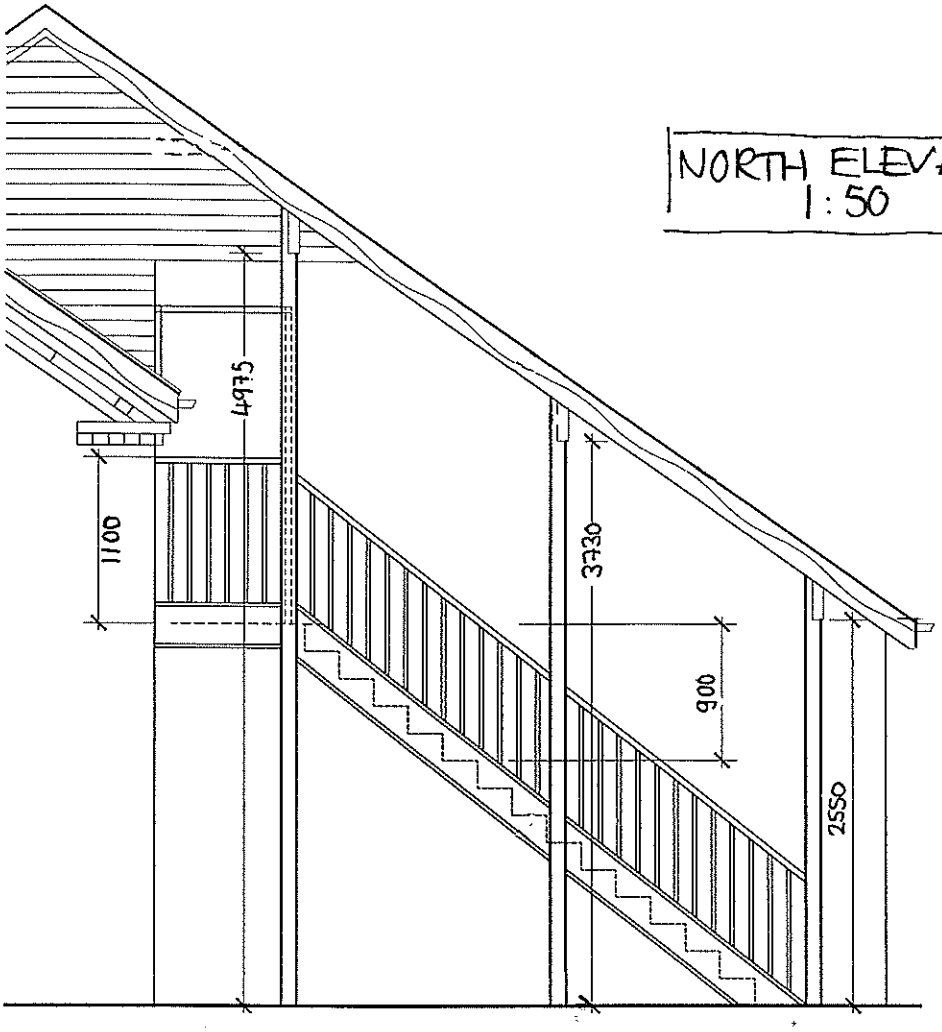

NORTH ELEVATION
1:50

COLOUR TO MATCH WALL
DETAILS ACCEPTABLE TO ME

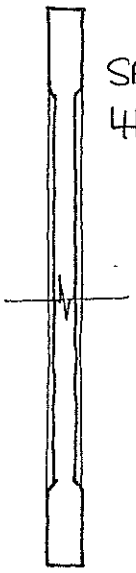

SPINDLES
41mm x 41mm

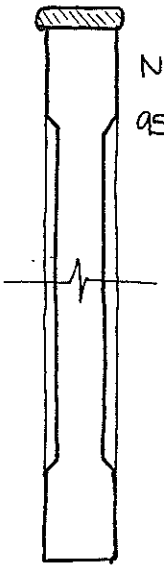

NEWEL POST
95mm x 95mm



SECTION THRO SPINDLE & NEWEL POST



SECTION THRO HANDRAIL



SECTION THRO BASE RAIL

REF	DATE	REVISION	DRAWN	CHECKED

DRAWING: STAIRCASE DETAILS	PROJECT: CRAZIES HALL WARGRAVE	SCALE: NTS	DRAWN BY: NJP
	CLIENT: MR R SMEE	DATE: MAY02	CHECKED BY: [signature]
		DRG NO: 200179 SK102	REV
		FILE REFERENCE:	

RIDGE
BEAUMONT HOUSE
59 HIGH STREET
THEALE
READING, RG7 5AL
TEL: 0118 932 3088
FAX: 01865 268701
E-mail: mail@ridge.co.uk
http://www.ridge.co.uk
Also at Oxford, Bristol and London

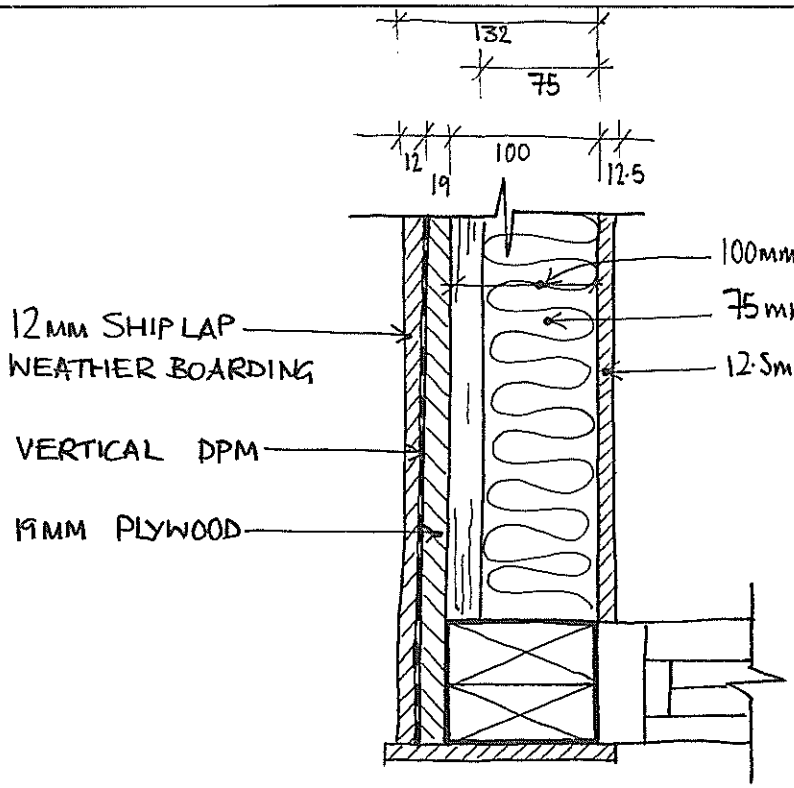

SECTION THRO DORMER CHEEK 1:5



TAKEN : 26/03/02

REF	DATE	REVISION	DRAWN	CHECKED

DRAWING: DORMER DETAIL

PROJECT: CRAZIES HALL WARGRAVE

CLIENT: MR R SMEE

SCALE: 1:5

DATE: APRIL 02

DRAWN BY: NJP

CHECKED BY: SR.

DRG NO: 200179 SK101

REV:

FILE REFERENCE:

RIDGE
BEAUMONT HOUSE
59 HIGH STREET
THEALE
READING, RG7 5AL
TEL: 0118 932 3088
FAX: 01865 268701
E-mail: mail@ridge.co.uk
http://www.ridge.co.uk
Also at Oxford, Bristol and London

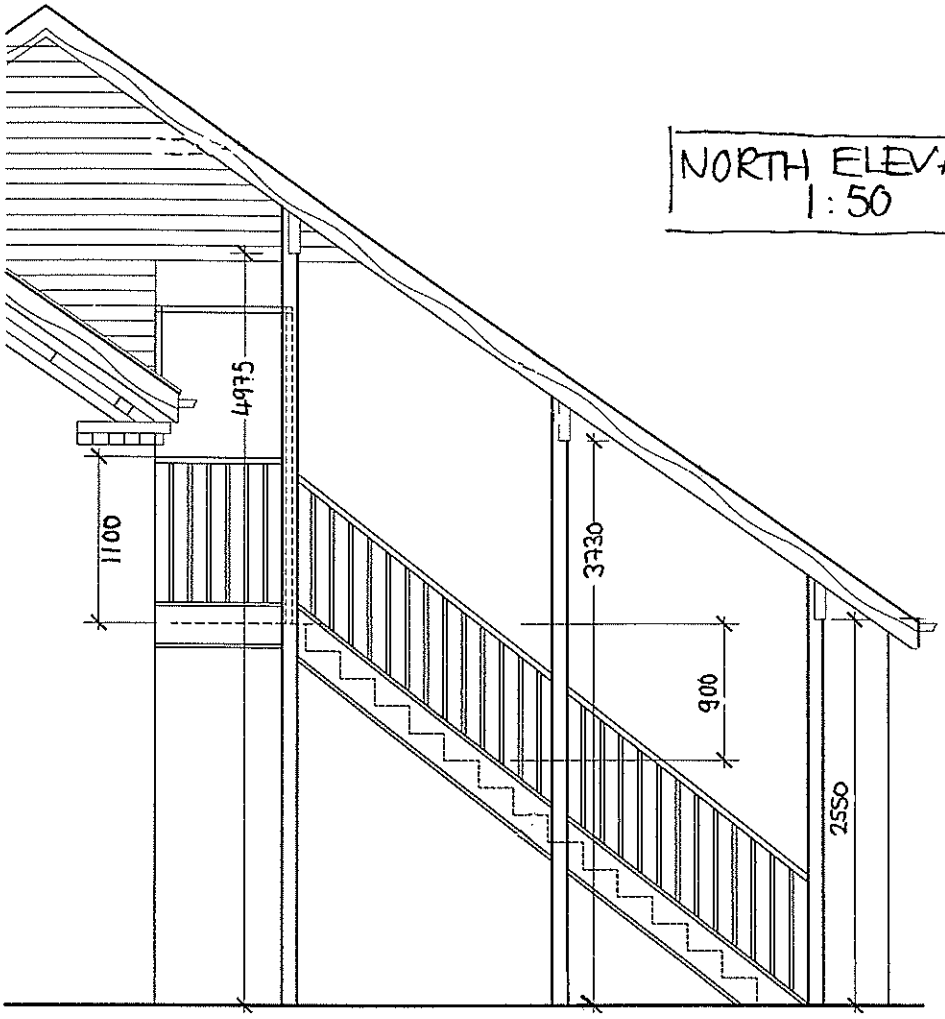

NORTH ELEVATION
1:50

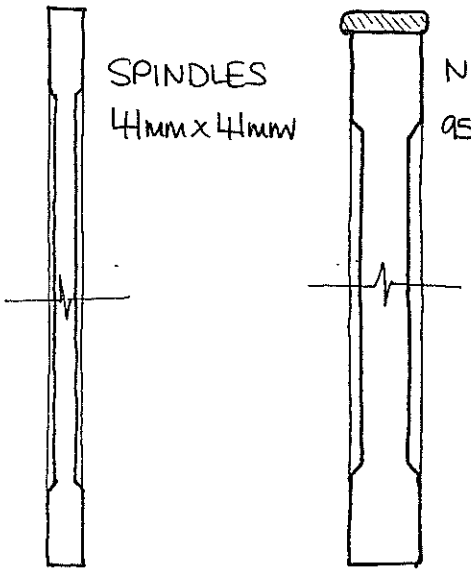

SPINDLES
41mm x 41mm

NEWEL POST
95mm x 95mm



SECTION THRO SPINDLE & NEWEL POST



SECTION THRO HANDRAIL



SECTION THRO BASE RAIL

REF	DATE	REVISION	DRAWN	CHECKED

DRAWING: STAIRCASE DETAILS

PROJECT: CRAZIES HALL WARGRAVE

CLIENT: MR R SMEE

SCALE: NTS

DRAWN BY: NJP

DATE: MAY02

CHECKED BY: SGR.

DRG NO: 200179 SK102 | REV

FILE REFERENCE:

RIDGE
BEAUMONT HOUSE
59 HIGH STREET
THEALE
READING, RG7 5AL
TEL: 0118 932 3088
FAX: 01865 268701
E-mail: mail@ridge.co.uk
http://www.ridge.co.uk
Also at Oxford, Bristol and London

NOTES:

1. DO NOT SCALE
2. DRAWINGS TO BE READ IN CONJUNCTION WITH ALL SERVICES AND STRUCTURAL ENGINEERS DRAWINGS & SPECIFICATIONS.
3. © COPYRIGHT. DRAWINGS NOT TO BE REPRODUCED OR USED WITHOUT PRIOR WRITTEN CONSENT.

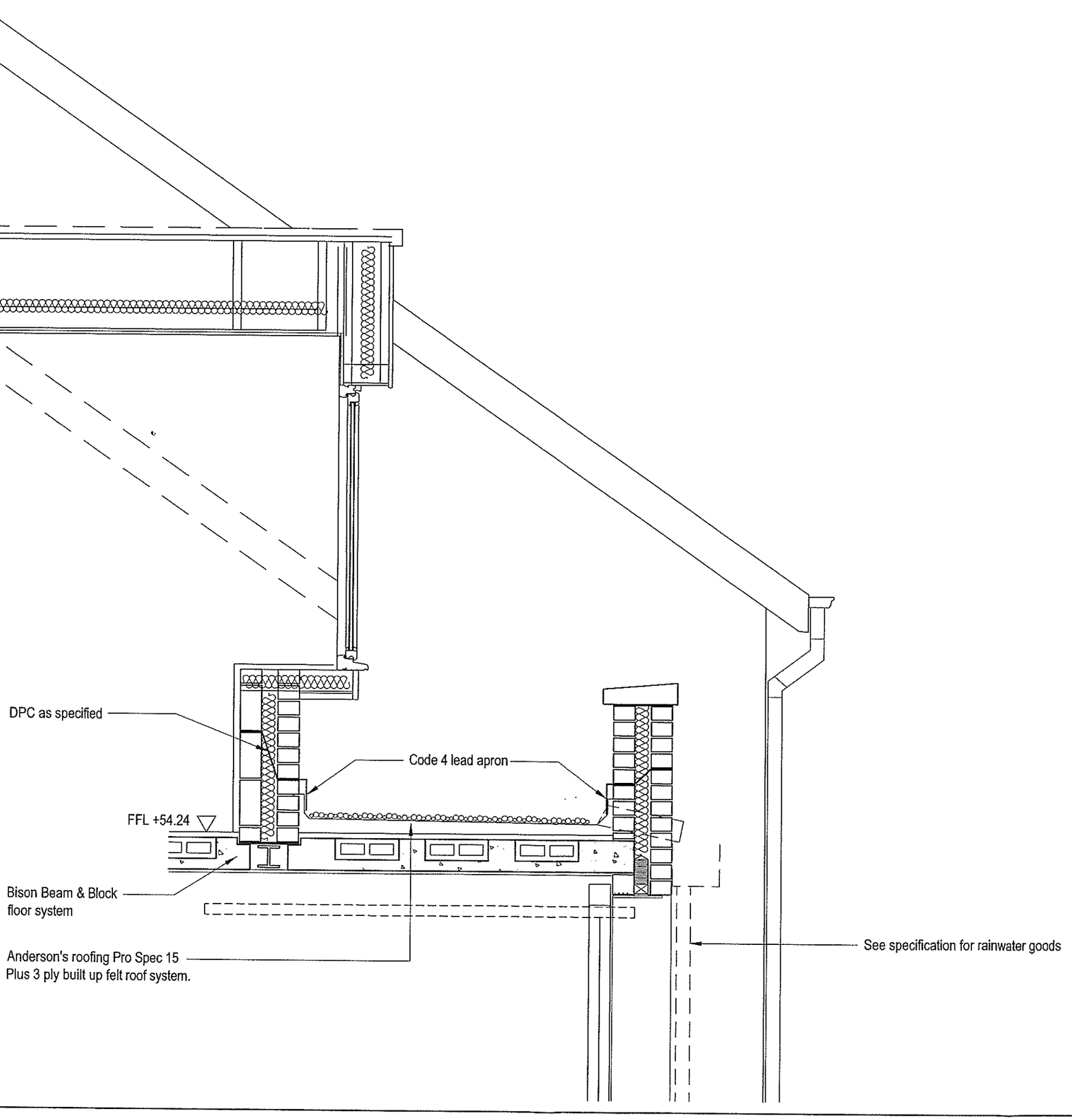

REF	DATE	REVISION	DRAWN	CHECKED

SCALE	DATE	DRAWN BY	CHECKED BY
1:20@A3	01.10.01	NP/jw	

DRAWING

SECTION THROUGH
GARAGE FLAT ROOF
AND PARAPET

PROJECT

NEW GARAGE AND FLAT
CRAZIES HALL

CLIENT

MR & MRS SMEE

RIDGE

BEAUMONT HOUSE
59 HIGH STREET
THEALE
READING, RG7 5AL

TEL: 0118 932 3088
FAX: 01865 268701
E-mail: mail@ridge.co.uk
http://www.ridge.co.uk

Also at Oxford, Bristol and London

DRG NO: 200179/ A105

REV:

FILE REFERENCE:
R:\DATA\JOBS\TEAM214\200179\DRAWINGS\..

XREF FILE REFERENCE:

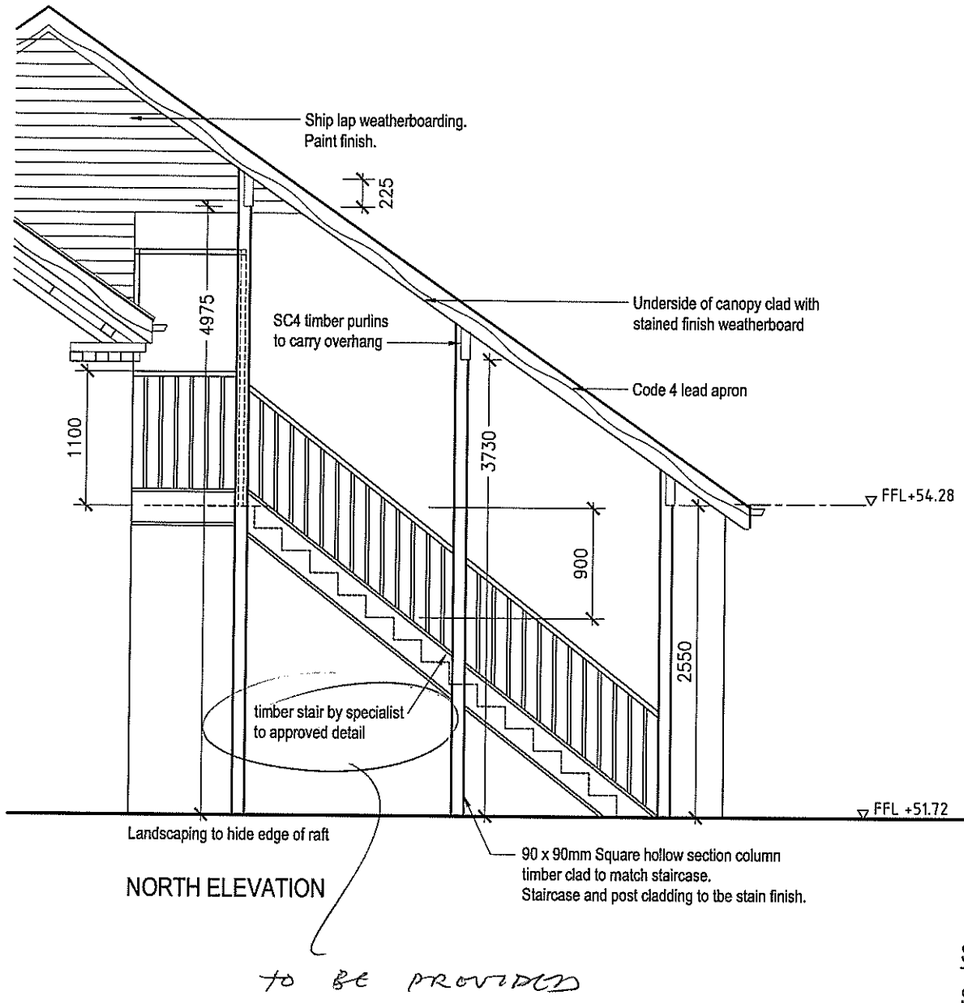

NORTH ELEVATION

TO BE PROVIDED

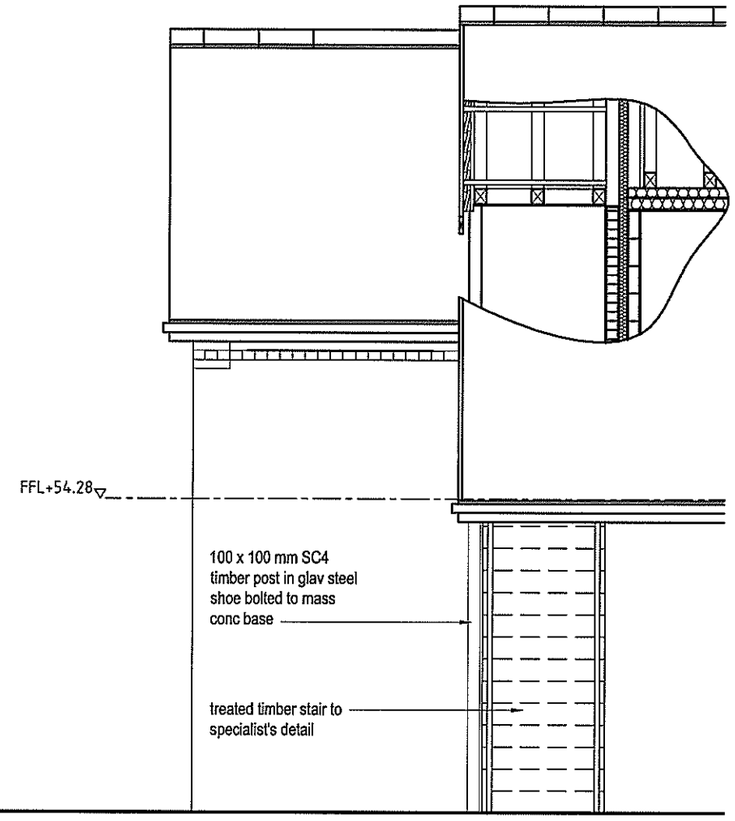

WEST ELEVATION

STAIR DETAILS

Scale 1:50.

NOTES:

1. DO NOT SCALE
2. DRAWINGS TO BE READ IN CONJUNCTION WITH ALL SERVICES AND STRUCTURAL ENGINEERS DRAWINGS & SPECIFICATIONS.
3. © COPYRIGHT. DRAWINGS NOT TO BE REPRODUCED OR USED WITHOUT PRIOR WRITTEN CONSENT.

PLANNING	HPT
POL	TCS
DC	SMS
APP	
CS	

04 APR 2002

COPIES TO	ACK:
	FILE:

REF	DATE	REVISION	DRAWN	CHECKED

SCALE	DATE	DRAWN BY	CHECKED BY
1:50@A3	22.01.02	NP/jw	

DRAWING

GARAGE DOOR DETAILS

PROJECT

NEW GARAGE AND FLAT
CRAZIES HALL

CLIENT

MR & MRS SMEE

RIDGE

BEAUMONT HOUSE
59 HIGH STREET
THEALE
READING, RG7 5AL

TEL: 0118 932 3088
FAX: 01865 268701
E-mail: mail@ridge.co.uk
http://www.ridge.co.uk

Also at Oxford, Bristol and London

DRG NO

200179/ A109

REV

FILE REFERENCE:

R:\DATA\JOBS\TEAM214\200179\DRAWINGS\..

XREF FILE REFERENCE:

NOTES:

1. DO NOT SCALE
2. DRAWINGS TO BE READ IN CONJUNCTION WITH ALL SERVICES AND STRUCTURAL ENGINEERS DRAWINGS & SPECIFICATIONS.
3. © COPYRIGHT. DRAWINGS NOT TO BE REPRODUCED OR USED WITHOUT PRIOR WRITTEN CONSENT.

GARAGE DOOR - ELEVATION
Scale 1:20.

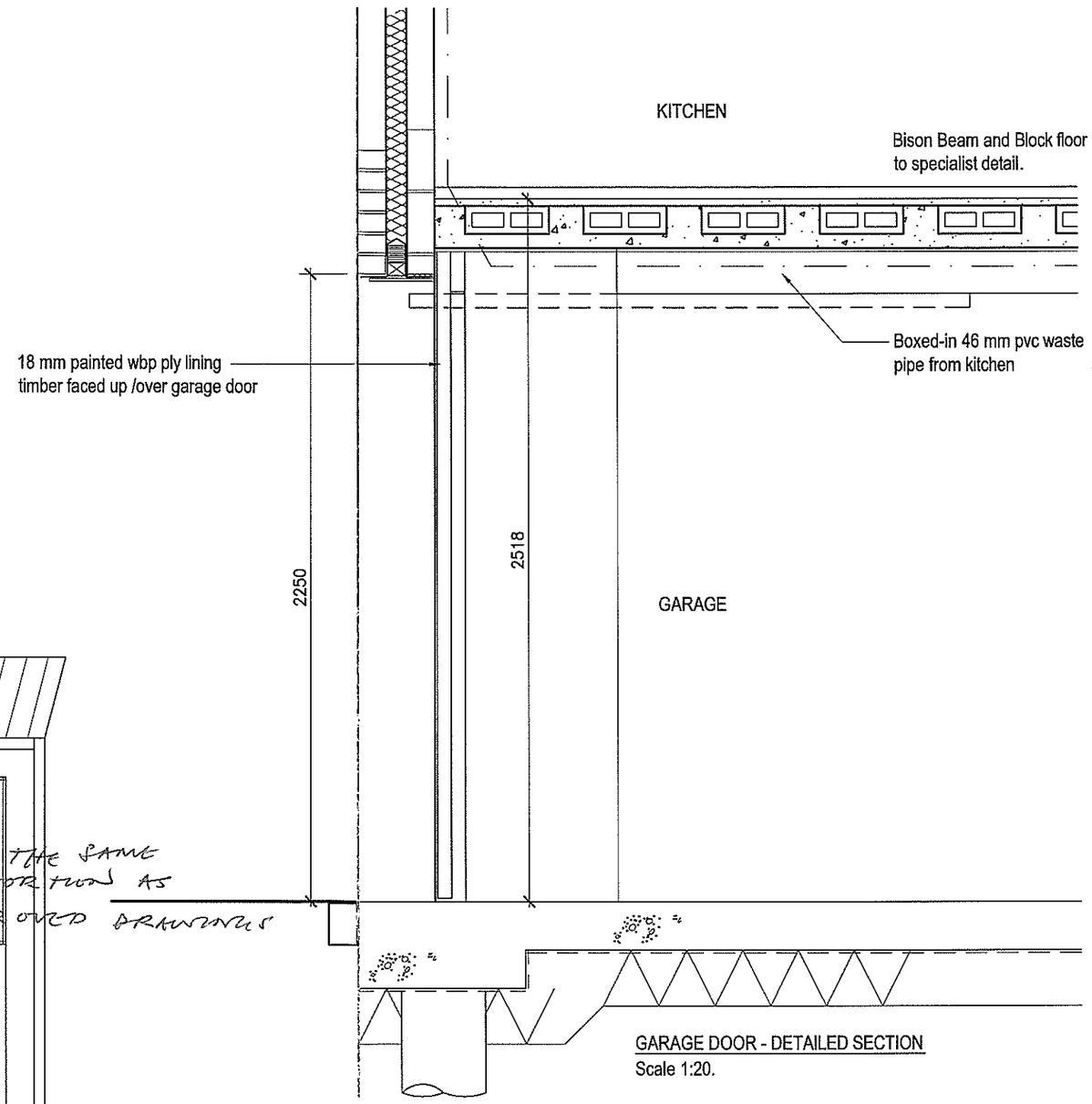

GARAGE DOOR - DETAILED SECTION
Scale 1:20.

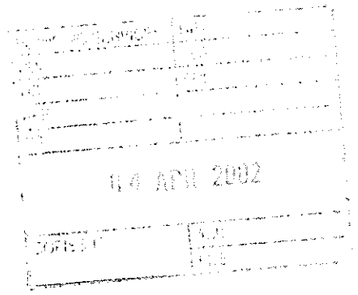

REF	DATE	REVISION	DRAWN	CHECKED

SCALE	DATE	DRAWN BY	CHECKED BY
1:20@A3	22.01.02	NP/jw	

DRAWING

GARAGE DOOR DETAILS

PROJECT

NEW GARAGE AND FLAT
CRAZIES HALL

CLIENT

MR & MRS SMEE

RIDGE

BEAUMONT HOUSE
59 HIGH STREET
THEALE
READING, RG7 5AL

TEL: 0118 932 3088
FAX: 01865 268701
E-mail: mail@ridge.co.uk
http://www.ridge.co.uk

Also at Oxford, Bristol and London

DRG NO: 200179/ A108

REV:

FILE REFERENCE:
R:\DATA\JOBS\TEAM214\200179\DRAWINGS\...

XREF FILE REFERENCE:

15. DEC. 2000* 3344



EDGINGTON SPINK·HYNE CHARTERED ARCHITECTS

RIDING COURT · RIDING COURT ROAD · DATCHET · BERKS SL3 9LL
TEL: WINDSOR 01753 580033 FAX: 01753 580633

SUMMERFIELD HOUSE

CRAZIES HILL

SKETCH VIEW

SCALE N.T.S.

DATE 5.7.2000 DRAWN HMAT.

JOB No. 3772 DWG No. SK1

APPROVED

MATERIALS: ALL TO MATCH EXISTING.

PAINTED STUCCO TO MAIN HOUSE
PAINTED BRICKWORK TO GARAGE/WORKSHOP AREA
WHITE FRAMED WINDOWS, DOORS, BALCONIES
SLATED ROOFS.

KEY

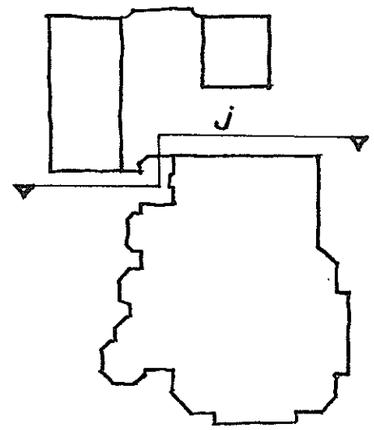

15. DEC. 2000

EDGINGTON SPINK·HYNE CHARTERED ARCHITECTS

RIDING COURT · RIDING COURT ROAD · DATCHET · BERKS SL3 9LE
TEL: WINDSOR 01753 580033 FAX: 01753 580633

SUMMERFIELD HOUSE

CRAZIES HILL · BERKSHIRE

ELEVATION - SIDE NORTH

SCALE 1:100

DATE August 2000 DRAWN Hugo

JOB No. 3772 DWG No. 11A

12 PLANNING GLB 14.12.00
1 CLIENT
1 R REYNOLDS.
1 RIDGE

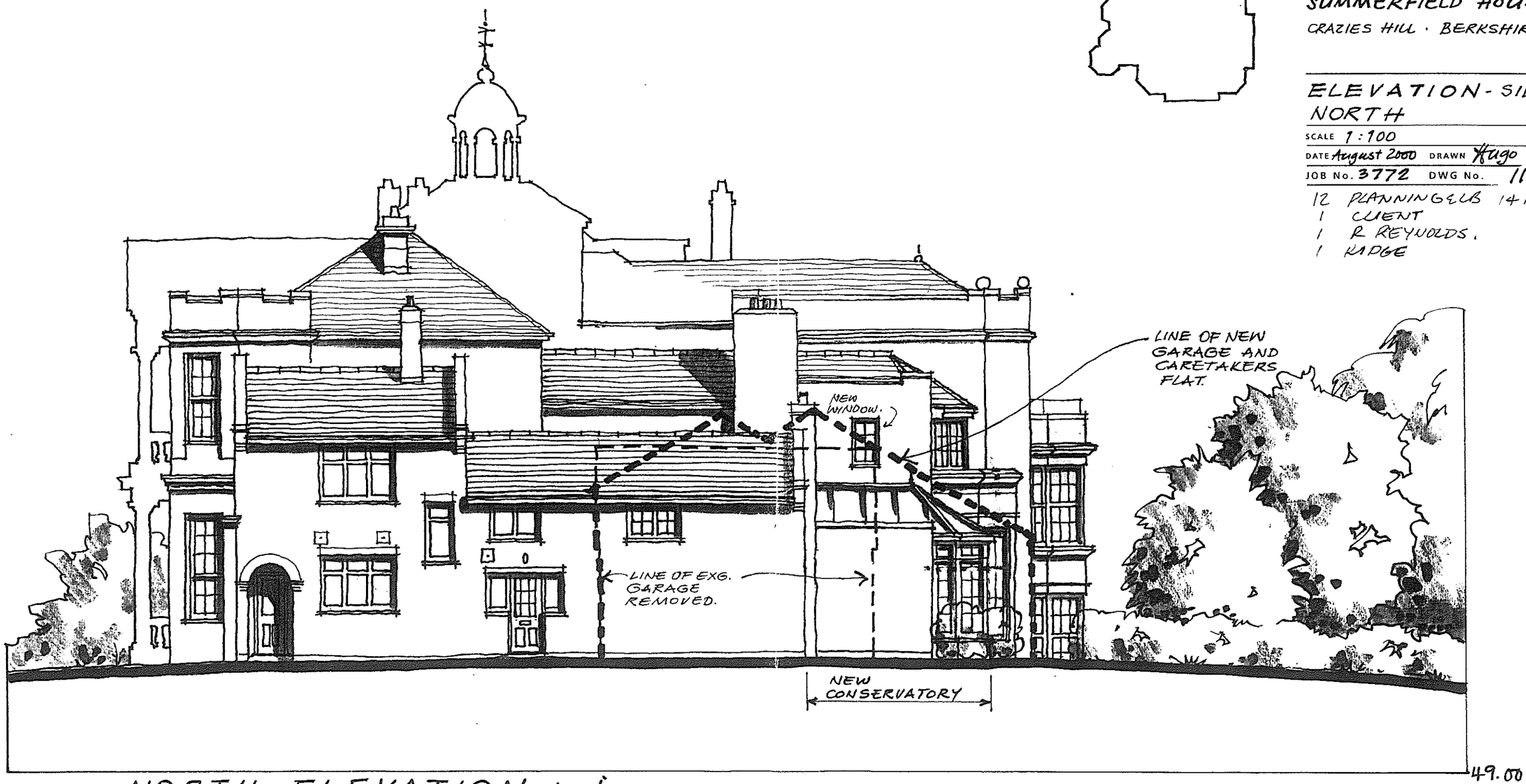

NORTH ELEVATION : J

49.00

APPROVED

NOTES:

1. DO NOT SCALE
2. DRAWINGS TO BE READ IN CONJUNCTION WITH ALL SERVICES AND STRUCTURAL ENGINEERS DRAWINGS & SPECIFICATIONS.
3. © COPYRIGHT. DRAWINGS NOT TO BE REPRODUCED OR USED WITHOUT PRIOR WRITTEN CONSENT.

WINDOW - FIRST FLOOR ELEVATION
Scale 1:20.

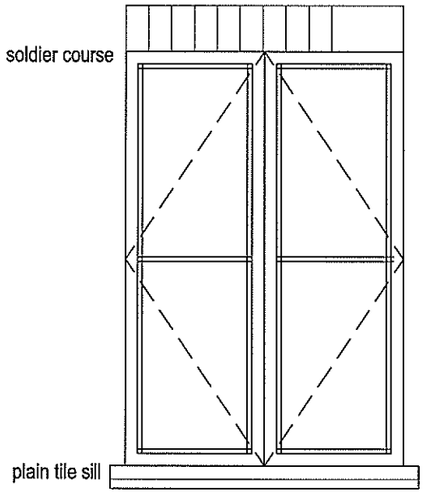

WINDOW - GROUND FLOOR ELEVATION
Scale 1:20.

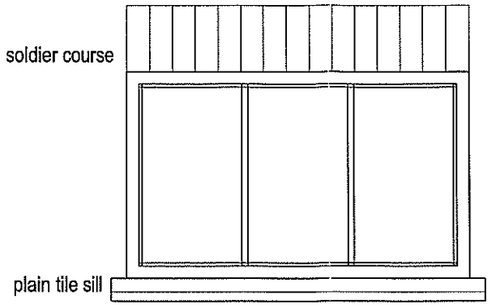

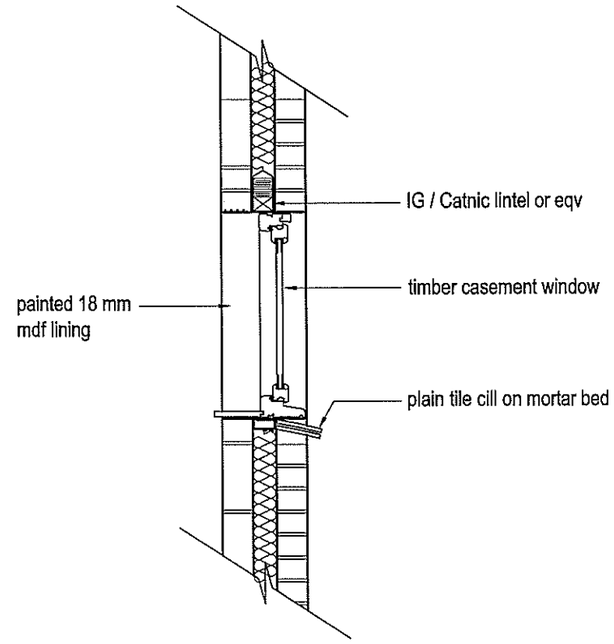

WINDOW - DETAILED SECTION
Scale 1:20.

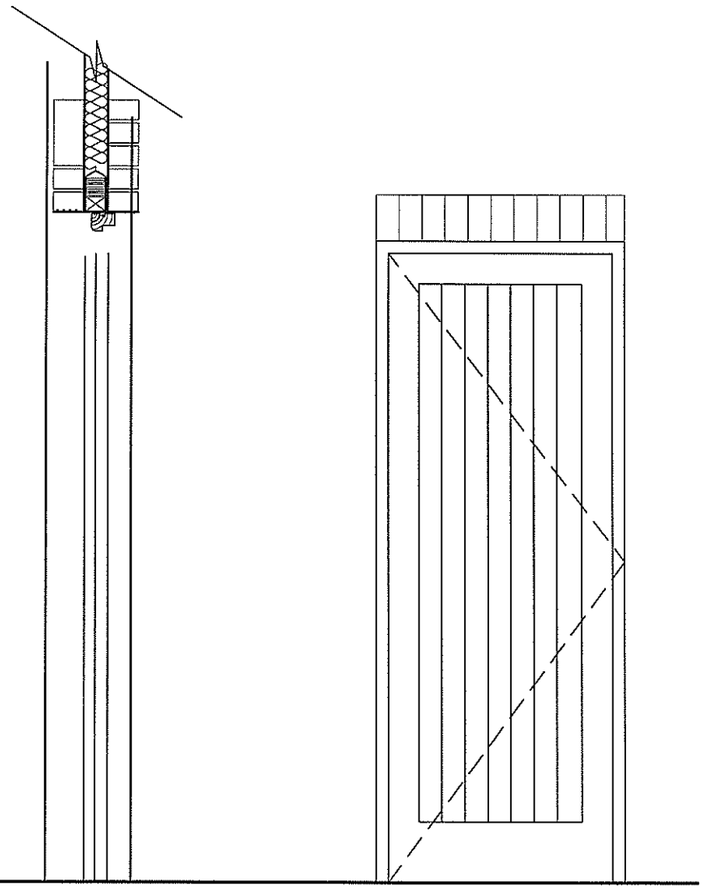

EXTERNAL DOOR - DETAILED SECTION
Scale 1:20.

CHECK ON SITE ✓
OK.

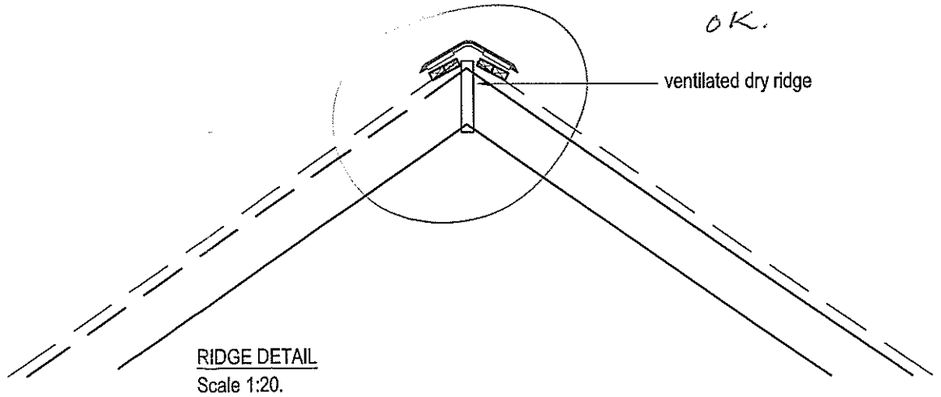

RIDGE DETAIL
Scale 1:20.

PLANNING BUILDING REGS
ENV
HIGH
04 APR 2002
COPIES TO
ADK
FILE

REF	DATE	REVISION	DRAWN	CHECKED

SCALE	DATE	DRAWN BY	CHECKED BY
1:20@A3	22.01.02	NP/jw	

DRAWING
WINDOW, EXTERNAL DOOR AND RIDGE DETAILS

PROJECT
NEW GARAGE AND FLAT
CRAZIES HALL

CLIENT
MR & MRS SMEE

RIDGE
BEAUMONT HOUSE
59 HIGH STREET
THEALE
READING, RG7 5AL
TEL: 0118 932 3088
FAX: 01865 268701
E-mail: mail@ridge.co.uk
http://www.ridge.co.uk
Also at Oxford, Bristol and London

DRG NO
200179/ A107

REV

FILE REFERENCE:
R:\DATA\JOBS\TEAM214\200179\DRAWINGS\...

XREF FILE REFERENCE:

NOTES:

1. DO NOT SCALE
2. DRAWINGS TO BE READ IN CONJUNCTION WITH ALL SERVICES AND STRUCTURAL ENGINEERS DRAWINGS & SPECIFICATIONS.
3. © COPYRIGHT. DRAWINGS NOT TO BE REPRODUCED OR USED WITHOUT PRIOR WRITTEN CONSENT.

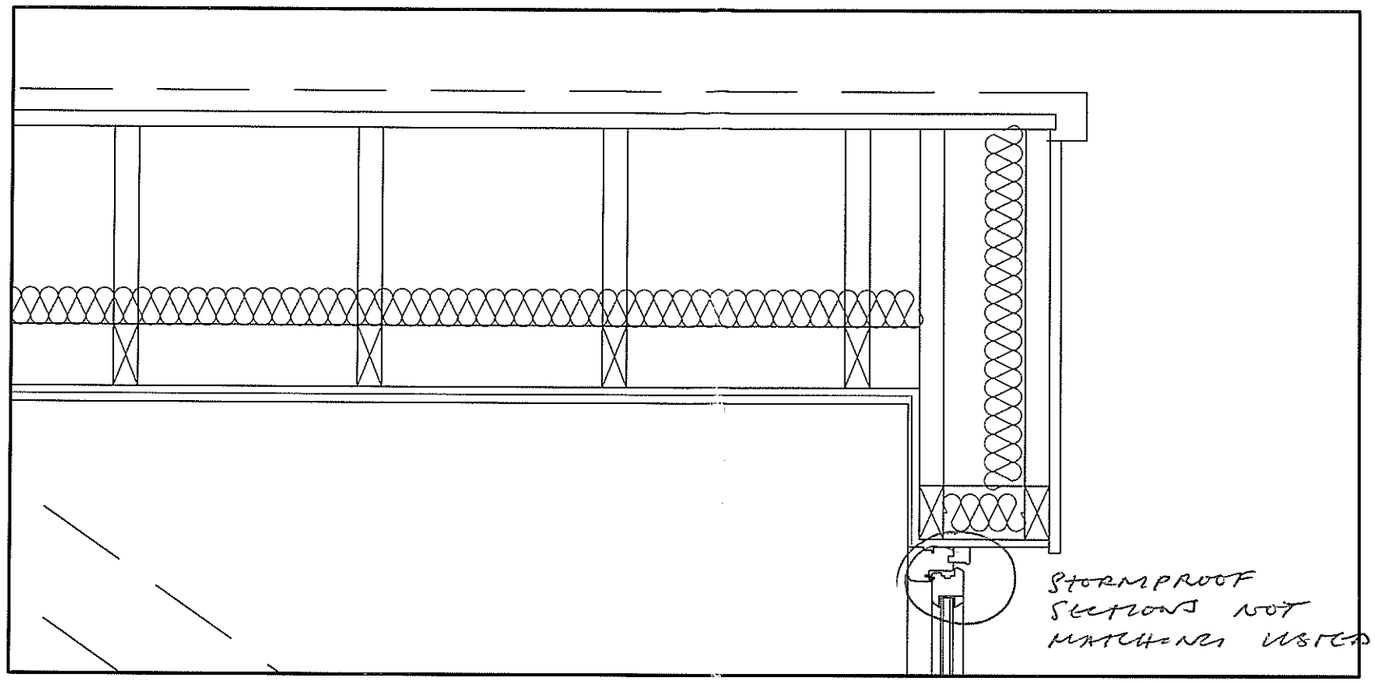

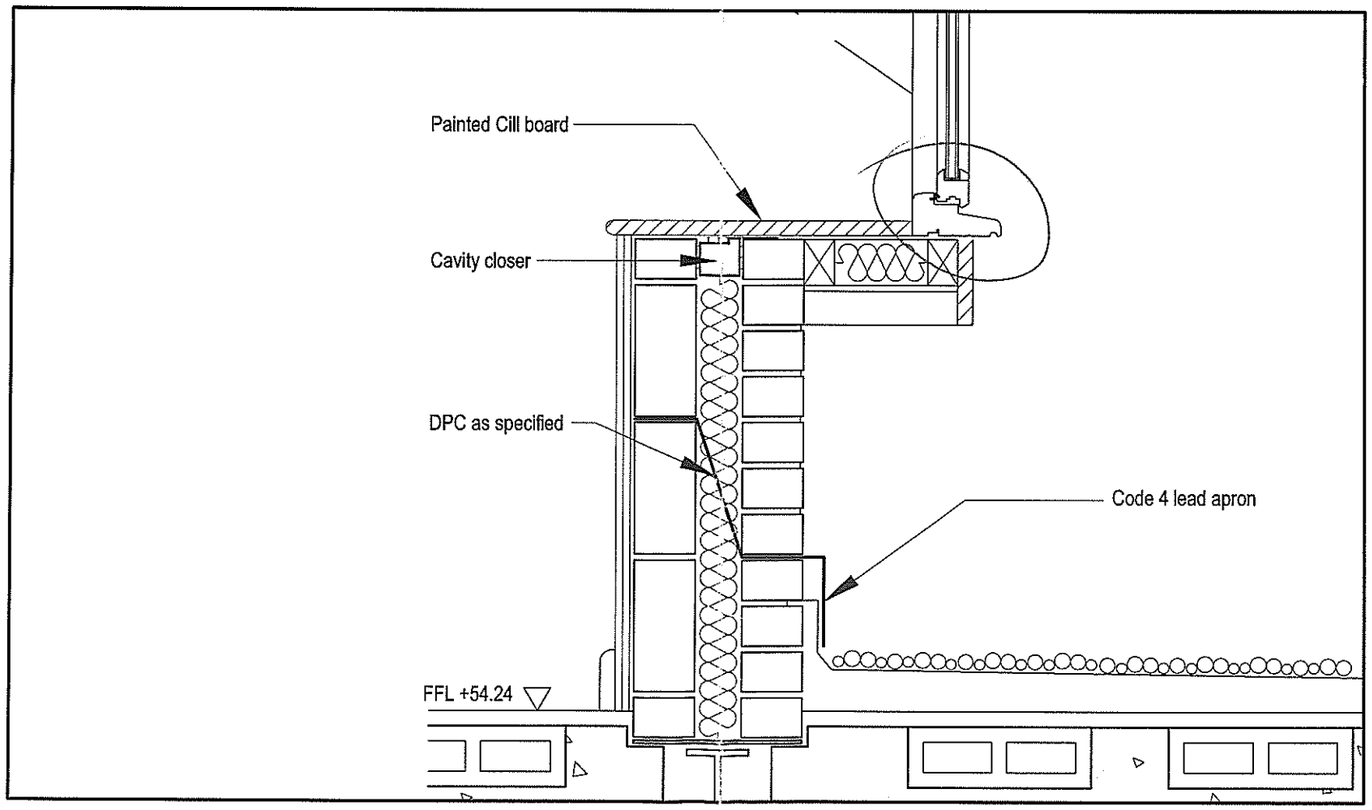

PLANNING SERVICES	HPT
POL	FLS
DC	RNF
APP	
CS	

04 APR 2002

COPIES TO	ACK.
	FILE:

REF	DATE	REVISION	DRAWN	CHECKED

SCALE	DATE	DRAWN BY	CHECKED BY
1:10@A3	29.10.01	NP/jw	

DRAWING

SECTION THROUGH DORMER

PROJECT

NEW GARAGE AND FLAT
CRAZIES HALL

CLIENT

MR & MRS SMEE

RIDGE

BEAUMONT HOUSE
59 HIGH STREET
THEALE
READING, RG7 5AL

TEL: 0118 932 3088
FAX: 01865 268701
E-mail: mail@ridge.co.uk
http://www.ridge.co.uk

Also at Oxford, Bristol and London

DRG NO: 200179/ A106

REV:

FILE REFERENCE:
R:\DATA\JOBS\TEAM214\200179\DRAWINGS\...

XREF FILE REFERENCE: