[redacted]

YSTEMS LTD

APPLICATION NO:
LB/2000/1430

LOCATION:
Farley Hill Farm Church Lane, Farley Hill Reading.

APPLICANT:
Mr Cannon C/O Mc Hallams

PROPOSAL:
Proposed infilling of window on gable wall of listed building.

EARLIEST DATE FOR DECISION: **11/06/2000**

APPLICATION EXPIRY DATE: **07/07/2000**

CASE OFFICER: **Emy Circuit**

WOKINGHAM DISTRICT COUNCIL

TOWN AND COUNTRY PLANNING ACTS

Notification of Approval of Permission

Mr Cannon
C/O Mc Hallams
3 London Court
The Mews East Street
Reading
Berkshire
RG1 4QL

Application Number: LB/2000/1430

Parish:	**SWALLOWFIELD**
Location:	**Farley Hill Farm, Church Lane, Farley Hill, Reading.**
Proposal:	**Proposed infilling of window on gable wall of listed building.**

The Wokingham District Council in pursuance of their powers under the above Acts and Regulations hereby **Approve Permission** for carrying out the above development in accordance with the application and the accompanying plans submitted to the Council subject to compliance with the following conditions, the reasons for which are specified hereunder.

Condition
1. The development hereby permitted shall be begun before the expiration of five years from the date of this permission.

Condition
2. No building work shall be carried out until full joinery details including how the new tie member will be supported and how the brickwork gable is to be supported have been submitted to and approved by the Local Planning Authority. Development shall be carried out in full accordance with these approved details and thereafter maintained.

Reason
1. In pursuance of Section 18(1)(a) of the Planning (Listed Buildings & Conservation Areas) Act 1990.

Reason

2. In the interests of the character and appearance of the Listed Building

John Mitchell
Development Control Manager
Date: 26/06/2000

If this notice grants permission to proceed with the proposal the applicant is reminded that it relates to planning permission only and does not constitute approval under any other legislation including Building Regulations.

Tel: (0118) 974 6479 (Direct Line)
Fax: (0118) 974 6484
Email: Emy.Circuit@wokingham.gov.uk
Date: 7 July 2000
My ref: EXC/LB/2000/1430
Your ref: 3331/SK1

R K West
Mchallams
3 London Court
The Mews
East street
READING
Berkshire
RG1 4QL

Environmental Services Department
Planning Services
P.O. Box 157
Shute End, Wokingham
Berkshire RG40 1WR
Tel: (0118) 974 6000
Fax: (0118) 974 6484
Minicom No: (0118) 974 6991
DX: 33506 – Wokingham

Dear Sir

FARLEY HILL FARM, CHURCH LANE, FARLEY HILL - SUBMISSION OF DETAILS TO COMPLY WITH CONDITION 02 OF LISTED BUILDING CONSENT LB/2000/1430

Thank you of the details of the timber connections and brickwork infill, which were received on 23 June 2000. I can confirm that these are acceptable and condition 02 of consent LB/2000/1430 has been discharged.

Yours faithfully

John Mitchell,
Development Control Manager

Date: 29 June 2000

To: H Sanders, Environmental Design

We have received Additional Plans to comply with conditions for the following planning application:

Application Number: LB/2000/1430

Location: Farley Hill Farm, Church Lane, Farley Hill, Reading.

Proposal: Proposed infilling of window on gable wall of listed building.

Applicant: Mr Cannon C/O Mc Hallams.

Case Officer: Emy Circuit

The new plans show the following: Details of new tie member. Drawing no 3331/SK1.

Comments are required by 09/07/2000.

Should you have any queries regarding this application please contact the case officer Emy Circuit on (0118) 974 6479.

DETAILS OF NEW TIE MEMBER ACCEPTABLE TO ME

Harold Sanders

Date: 29 June 2000

To: Case Officer

We have received Additional Plans to comply with conditions for the following planning application:

Application Number: LB/2000/1430

Location: Farley Hill Farm, Church Lane, Farley Hill, Reading.

Proposal: Proposed infilling of window on gable wall of listed building.

Applicant: Mr Cannon C/O Mc Hallams.

Case Officer: Emy Circuit

The new plans show the following: Details of new tie member. Drawing no 3331/SK1.

Comments are required by 09/07/2000.

Should you have any queries regarding this application please contact the case officer Emy Circuit on (0118) 974 6479.

(RING ONE)

REVISED PLANS | ADDITIONAL PLANS | MINOR AMENDMENTS | ADDITIONAL / REVISED PLANS TO COMPLY WITH CONDITIONS

App No. LB/2000/1430 (Planaps) / (Ludhouse) Date Rec. 23 June 2000

Location: Fairey Hall Farm, Church Lane, Fairey Hall

Parish Swallowfield

Applicant: Mr Cannon

Description of attached plans details of new he member

Drawing No's: 3331/SK1

CONSULTEES

Copies of plans will automatically be sent to Woodley Library, Part I Reg., Parish Council, Ward Councillors and the Case Officer unless specified.

Please tick which of the following you wish consulted.

OTHERS: _____

Drawing No's

1. NK (Landscape & Trees) _____ ☐
2. NK (Env. Design) _____ ☑
3. XA (Highways) _____ ☐
4. NF (Building Control) _____ ☐
5. BC/DC Liaison _____ ☐

A full set of plans will be sent to all consultees unless particular drawing No's are specified in the spaces above.

NEIGHBOURS: _____

Date for Responses 10 days.

FURTHER ACTION

Re-advertise App. Y (N) (Delete as required)

Redate Application Y (N) From _____

New Site Notice Y (N)

New Description _____

CASE OFFICER EXC.

Consultations Sent by Admin. on 29.06.PS.

Yellow - Part One Copy
Green - Officer's Copy

1970

(RING ONE)

REVISED PLANS	ADDITIONAL PLANS	MINOR AMENDMENTS	ADDITIONAL / REVISED PLANS TO COMPLY WITH CONDITIONS

App No. [illegible] (Planaps) / (Ludhouse) Date Rec. 23 June 2000

Location: Fairley Hill Farm, [illegible] Lane, Fairley Hill

Parish S. Wallowfield

Applicant: [illegible]

Description of attached plans [illegible]

Drawing No's: 3331/5[illegible]

CONSULTEES

Copies of plans will automatically be sent to Woodley Library, Part I Reg., Parish Council, Ward Councillors and the Case Officer unless specified.

Please tick which of the following you wish consulted.

OTHERS:

		Drawing No's	
1.	NK (Landscape & Trees)		✓
2.	NK (Env. Design)		
3.	XA (Highways)		
4.	NF (Building Control)		
5.	BC/DC Liaison		

A full set of plans will be sent to all consultees unless particular drawing No's are specified in the spaces above.

NEIGHBOURS:

Date for Responses 10 days.

FURTHER ACTION

Re-advertise App. Y / N (Delete as required)

Redate Application Y / N From

New Site Notice Y / N

New Description

CASE OFFICER EXC.

Consultations Sent by Admin. on 29.06.[illegible]

Yellow - Part One Copy
Green - Officer's Copy

mchallams

consulting engineers

Our Ref: 3331/HD/dm

30962

PLANNING SERVICES	RPT
POL	TLS
DC	ENF
APP	
CS	
23 JUN 2000	
COPIES TO:	
	FILE:

structural & civil engineers
building engineers
party wall surveyors

partner:
B S E HINDMARSH
C ENG M I STRUCT E MASI
associate:
R K WEST

Wokingham District Council
P.O. Box 157
Council Offices
Shute End
Wokingham
Berkshire

Attention: Emy Circuit

ADDITIONAL PLAN

1430 1

21 June 2000

Dear Sirs

Re: Farley Hill Farm, Church Lane, Farley Hill, Reading
Application No. LB/2000/1430

Further to your letter dated 18 May 2000 and our subsequent telephone conversation we now enclose five copies of our drawing no. 3331/SK1 showing the new to existing timber connections and the brickwork infill details for your approval.

Yours faithfully

R K West
Mchallams

Enc.

CC: Mr H Cannon + enclosures
Cunningham Ellis & Buckle – Louise Kindred + enclosures
RAM Underpinning Specialists + enclosures

3 london court the mews east street reading berkshire rg1 4ql T 0118 9594 042 F 0118 9574 941 E ics.mchallams@virgin.net

consulting engineers 3 london court, the mews, east street, reading, berkshire, rg1 4ql T 0118 959 4042 F 0118 957 4941 E ics.mchallams@virgin.net

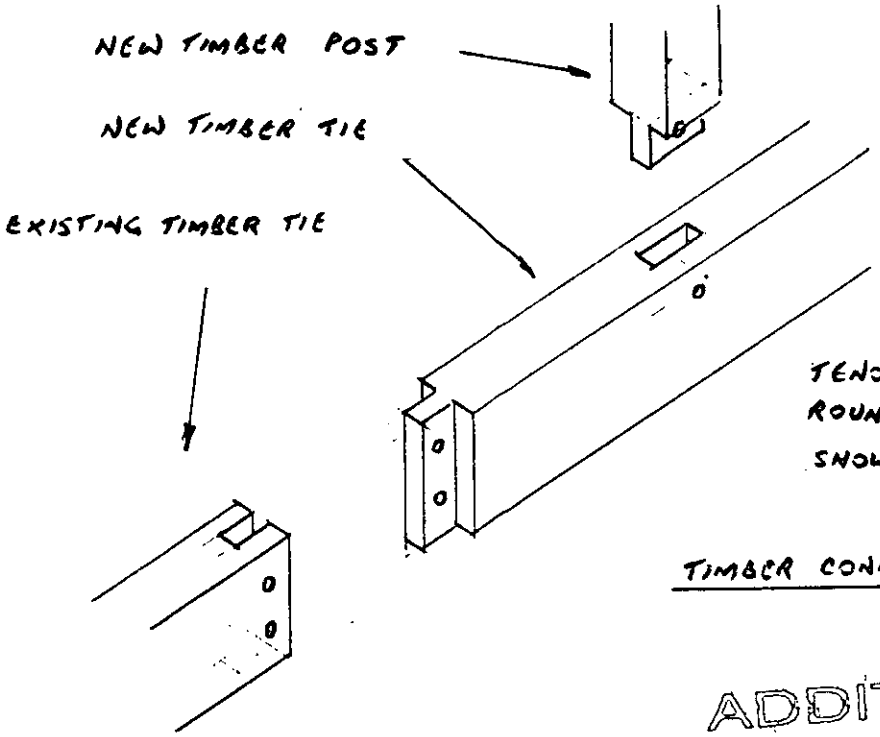

TENON JOINTS TO RECEIVE ROUND TIMBER DOWELS AS SHOWN

TIMBER CONNECTION DETAILS

ADDITIONAL PLAN

1430

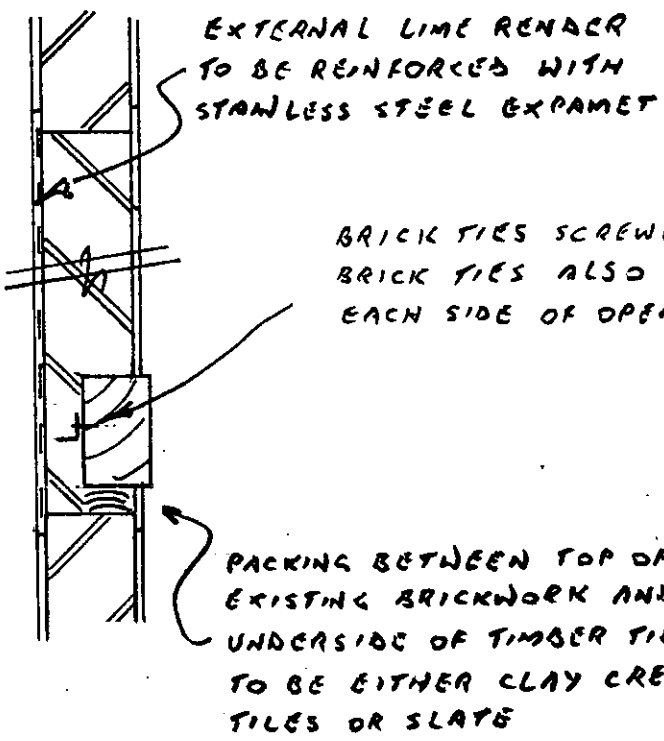

VERTICAL SECTION

contract	FARLEY HILL FARM	contract	sheet	rev.
location	WINDOW INFILL DETAILS	3331	SK1	

consulting engineers 3 leadon court, the mews, east street, reading, berkshire, rg1 4ql T 0118 959 4042 F 0118 957 4941 E ics.mchallams@virgin.net

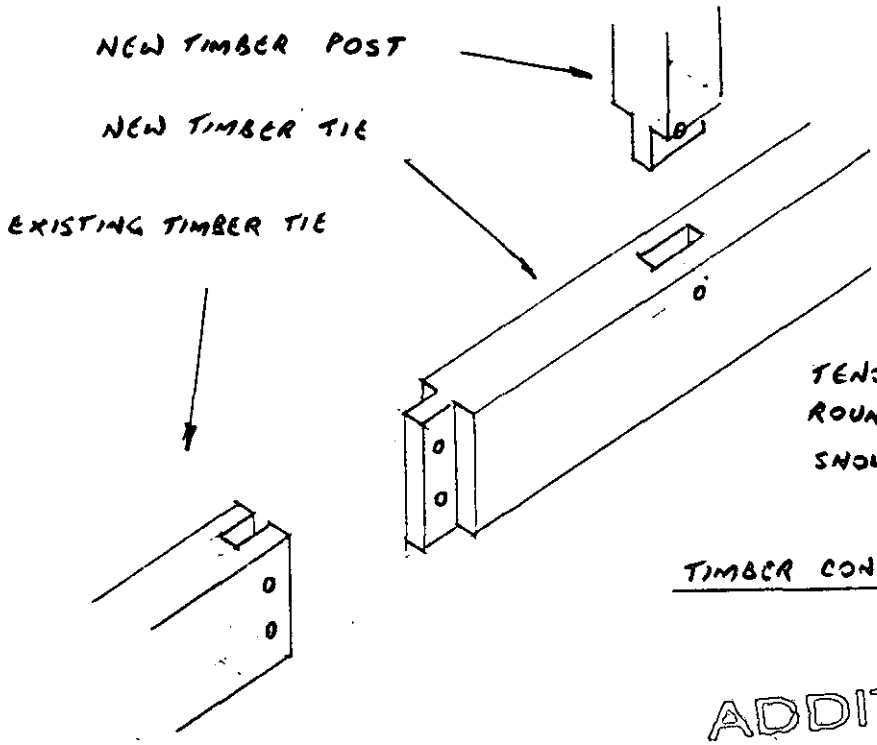

TENON JOINTS TO RECEIVE ROUND TIMBER DOWELS AS SHOWN

TIMBER CONNECTION DETAILS

ADDITIONAL PLAN

W431

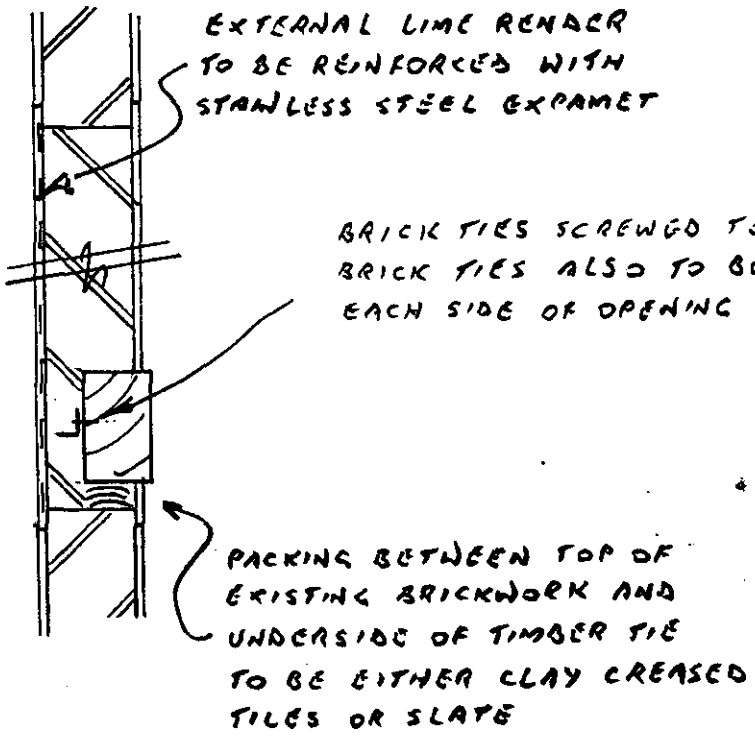

VERTICAL SECTION

contract	FARLEY HILL FARM	contract	sheet	rev.
location	WINDOW INFILL DETAILS	3331	SK1	

mchallams

consulting engineers 3 london court, the mews, east street, reading, berkshire, rg1 4ql T 0118 959 4042 F 0118 957 4941 E ics.mchallams@virgin.net

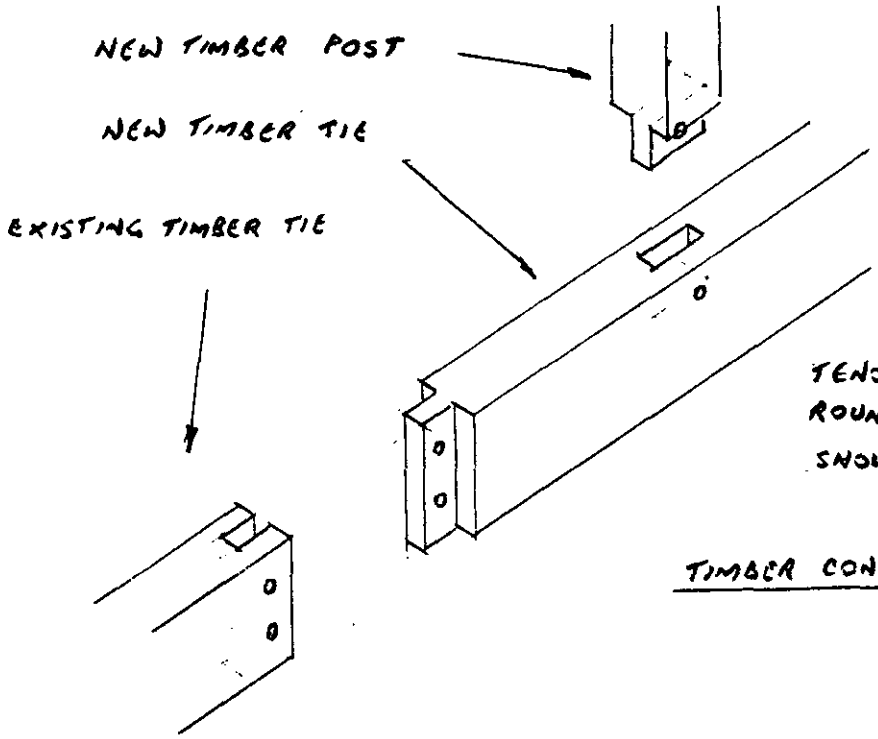

TENON JOINTS TO RECEIVE ROUND TIMBER DOWELS AS SHOWN

TIMBER CONNECTION DETAILS

1430

ADDITIONAL PLAN

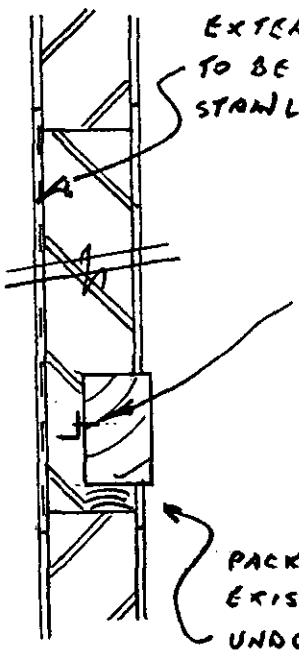

EXTERNAL LIME RENDER TO BE REINFORCED WITH STAINLESS STEEL EXPAMET

BRICK TIES SCREWED TO TIMBER TIE. BRICK TIES ALSO TO BE PROVIDED AT EACH SIDE OF OPENING @ 225mm VERT. C/L

PACKING BETWEEN TOP OF EXISTING BRICKWORK AND UNDERSIDE OF TIMBER TIE TO BE EITHER CLAY CREASED TILES OR SLATE

VERTICAL SECTION

contract	FARLEY HILL FARM	contract	sheet	rev.
location	WINDOW INFILL DETAILS	3331	SK1	

mchallams

consulting engineers 3 leadon court, the mews, east street, reading, berkshire, rg1 4qt T 0118 959 4042 F 0118 957 4941 E ics.mchallams@virgin.net

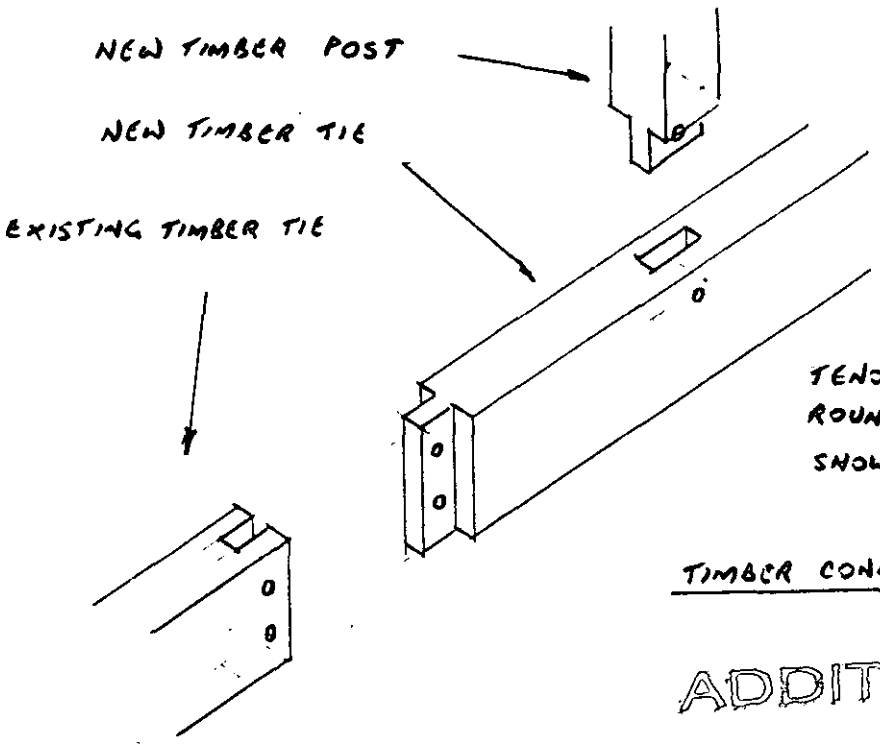

TENON JOINTS TO RECEIVE ROUND TIMBER DOWELS AS SHOWN

TIMBER CONNECTION DETAILS

ADDITIONAL PLAN

1430

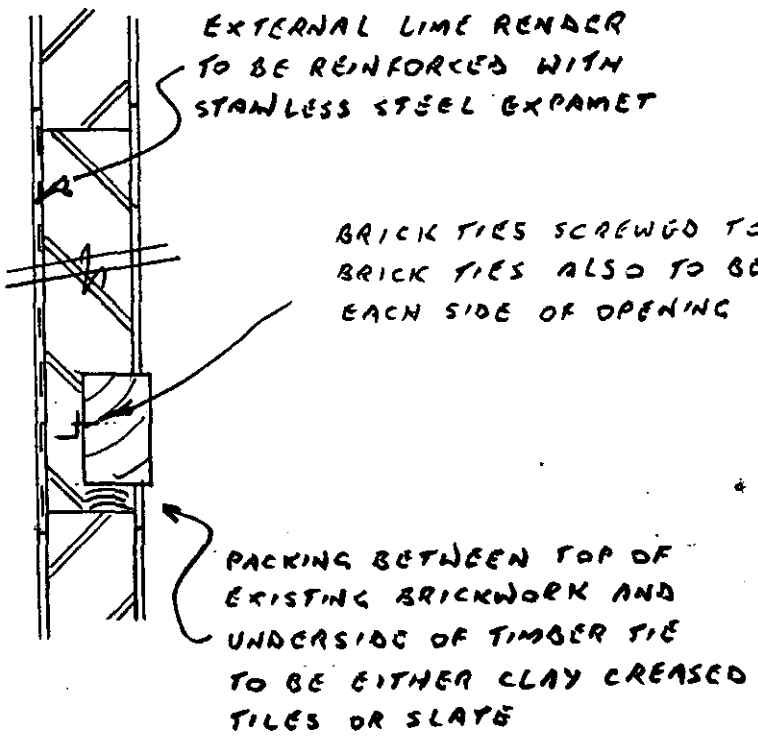

VERTICAL SECTION

contract	FARLEY HILL FARM	contract	sheet	rev.
location	WINDOW INFILL DETAILS	3331	SK 1	

Application Number LB/2000/1430
Conditions/~~Reasons for Refusal~~

No	Std Con	Std Reas	Non Std Conditions / Reasons for Refusal
01	SC01	SR03	
02	(from SC65)		No building work shall be carried out until full joinery details including how the new tie member will be supported and how the brickwork gable is to be supported ....
		SR25	delete "setting" and insert "characte"

John Murden
26/6/00

RECORD OF SITE VISIT

WOKINGHAM DISTRICT COUNCIL

SITE ADDRESS: Farley Hill Farm
Church Lane Farley Hill Reading.

APPLICATION NUMBER: LB/2000/1430

OFFICER: Emy Circuit

DATE OF SITE VISIT: 30 May 2000

1 SITE/STATUTORY NOTICE DISPLAYED ? on gatepost.

2. DESCRIPTION OF SURROUNDINGS

rural setting.

3. DESCRIPTION OF SITE/BUILDING

2-storey timber frame building, rendered
gravel frontage

4. RELATIONSHIP TO ADJOINING PROPERTIES

N/A
hedge along lane restricts longer views

5. SITE CONSTRAINTS

TREES

ACCESS/PARKING

LEVELS

BOUNDARY TREATMENT front post + rail fence
side 4m conifer hedge

OTHERS

WORK SHEET FOR : Emy Circuit

Application Number : LB/2000/1430

Applicant : Mr Cannon C/O Mc Hallams.

Location : Farley Hill Farm, Church Lane, Farley Hill, Reading.

Proposal : Proposed infilling of window on gable wall of listed building.

Site Notice Displayed ? :	YES	NO	DATE
	✓		30 May 2000

Date of Neighbour Notifications : .....

Date of Site Visit : .....30 May 2000.....

Date Registered : 12/05/2000

Earliest Date for Decision : 11/06/2000

Latest Consultation Date/Site Notice Expiry Date : 11/06/2000

Application Expiry Date: 07/07/2000

Consultation Responses :

Conservation - support removal of window
- detail needed of how brickwork would be supported.

Swallowfield PC - "no objection"

Planning Issues :

Countryside
Area of Special Landscape Importance
Area of Special character

Application Number: LB/2000/1430
Farley Hill Farm, Church Lane, Farley Hill

Appraisal: The proposal is for infilling of a window in the gable wall of the listed building. There are structural problems with the building and, from a conservation perspective, the proposals and their impact on the character of the listed building are welcomed.

Recommendation: conditional approval

Received by Wokingham District Council

Application No: LB/2000/1430

Proposal:
Proposed infilling of window on gable wall of listed building.

Location:
Farley Hill Farm, Church Lane, Farley Hill, Reading.

The application is available for inspection at Wokingham District Council's offices during the following times:

PLANNING DEPARTMENT, SHUTE END, WOKINGHAM TEL (0118) 974 6428
8.30 - 5.00 Monday - Thursday & 8.30 - 4.00 Friday

WOODLEY LIBRARY HEADLEY ROAD WOODLEY (9.30am - 7.00pm Mon, Thurs & Fri. 9.30am - 5.00pm Tues, 9.30am - 1.00pm Saturday. closed all day Wednesday). If you intend to view this application at Woodley Library (see details above) please allow 4 days from the date of this notice for delivery of plans.

Comments should be sent in writing QUOTING THE APPLICATION NUMBER to the Case Officer Emy Circuit P.O. Box 157 Council Offices, Shute End, Wokingham Berkshire, RG40 1WR to arrive on or before 11/06/2000. Written comments submitted will become available for public inspection.

In view of the very large number of planning applications and letters of comment received, it will not normally be possible for an individual reply to observations made. However any comments will be taken into account when the application is determined and you will be notified of the decision.

Head Planning and Transportation

18 May 2000

Wokingham District Council
Planning Application

Town and Country Planning (General Development Procedure) Order 1995 – Notice under Article 8

AND/OR

Planning (Listed Buildings and Conservation Areas) Regulations 1990 and Planning (Listed Buildings and Conservation Areas) Act 1990

Application No: LB/2000/1430

Proposal:
Proposed infilling of window on gable wall of listed building.

Location:
Farley Hill Farm Church Lane Farley Hill Reading

This application is being advertised in the Reading Chronicle newspaper on the 02/06/2000 for the following reason(s);

SITE IS A LISTED BUILDING

The application can be inspected at Wokingham District Council's offices during the following times:

PLANNING DEPARTMENT, SHUTE END, WOKINGHAM TEL (0118) 974 6428
8.30 - 5.00 Monday - Thursday & 8.30 - 4.00 Friday

WOODLEY LIBRARY HEADLEY ROAD WOODLEY (9.30am - 7.00pm Mon, Thurs & Fri. 9.30am - 5.00pm Tues, 9.30am - 1.00pm Saturday. closed all day Wednesday)

Comments should be sent in writing QUOTING THE APPLICATION NUMBER to the Case Officer Emy Circuit P.O. Box 157 Council Offices, Shute End, Wokingham, Berkshire, RG40 1WR to arrive before **23/06/2000** from the date of this notice. Written comments submitted will become available for public inspection.

In view of the very large number of planning applications and letters of comment received, it will not be possible for an individual reply to observations made. However any comments will be taken into account when the application is determined and you will be notified of the decision.

Date: 02/06/2000

**********FILE COPY**********

Tel: (0118) 974 6479

Date: **18 May 2000**

My ref: LB/2000/1430

CONFIDENTIAL

Councillor Beatty
The Lieutenants Cottage
Three Mile Cross
Reading
RG7 1AP

Environmental Services Department
Planning Services
P.O. Box 157
Shute End, Wokingham
Berkshire RG40 1WR
Tel: (0118) 974 6000
Fax: (0118) 974 6484
Minicom No: (0118) 974 6991
DX: 33506 – Wokingham

Dear Councillor

Application Number: LB/2000/1430
Farley Hill Farm, Church Lane, Farley Hill, Reading.
Proposed infilling of window on gable wall of listed building.

I write to let you know that the above mentioned house holder application has been received

At this stage a recommendation has not yet been made. This form should only be returned if it is likely that you may wish the application to be listed for consideration by the Development Control Sub-Committee. This form must be received no later than 28 days from the date of this letter.

If you have any questions please do not hesitate to contact **Emy Circuit** on **(0118) 974 6479**.

Yours faithfully,

John Mitchell

John Mitchell
Development Control Manager

LISTING FORM

Case officer: **Emy Circuit** Application Number: **LB/2000/1430**
Farley Hill Farm, Church Lane, Farley Hill, Reading.
Proposed infilling of window on gable wall of listed building.
I wish this application to be listed should the officers recommendation be for_____
and my reason(s) are_____
_____
_____

Signed: _____ Date: _____
Councillor Beatty

**********FILE COPY**********

WOKINGHAM D.C. DEVELOPMENT CONTROL

VALID

Start date: [illegible]	12 / 5 / 00
Officer: EXC	Application No. LB / 2000 / 1430

Map No. 104 Site 1.40

Easting: ..... Flood Pln .....

Northing: ..... Mineral .....

Level: ☐ Sub Committee ☑ Delegated ☐ Sec. State

☐ Incorrect Fee ☐ Invalid ☐ PD

Description:
(LB) PROPOSED INFILLING OF WINDOW ON GABLE WALL OF LISTED BUILDING

Location: FARLEY HILL FARM COTTAGE CHURCH LANE

Parish: SWALLOWFIELD Ward: Swallowfield 18.5.2000.

Applicant: MR CANNON

Fee Received ✓ N/R Required ..... Additional ..... Refund .....

Enforcement Section to be notified ☐ tick if required

Additional information required for validation

		Reason	Requested	Received
1	1:2500 OS location plan showing property edged in blue/red			
2	1:500 block plan showing existing & proposed dev. + adj. Properties	Show position of window on plan.	9/5	✓ 12/5
3	Forms unsigned	3a) Site address.	9/5	✓ 12/5
4	Correct S 66 certificate			
5	Elevation plans	Elevation of wall.	9/5	✓ 3D view
6	Floor plans	1st floor floor plan not supplied (showing affected window)	9/5	✓ part floor plan
7	Metric scale disclaimer			
8	Encroachment letter			
9	Miscellaneous			

APPLN NO. _____

ACTION REQUIRED BY DEVELOPMENT CONTROL

Conservation Area .....

Listed Building 1 (2) 2*

Advertisement Required Listed Building

Date Site Notice Sent : 18.5.2000 Parish Council Informed - YES / NO

INTERNAL CONSULTATIONS

Building Control	NF: .....
Landscape	NK: .....
Trees	NK: .....
(Conservation Officer)	(NK:) ✓ .....
Environmental Health	NA: .....
Housing	NA: .....
Leisure & Cultural services	PA: .....
Public Rights of Way	PA: .....
Property	NG: .....
District Secretary (only if called in by SOS)	MA: .....
Policy & Plans	QA: .....
Strategic Planning (JSPU)	HA: .....
Minerals (BABTIE)	GA: .....
Archaeological Site (BABTIE)	: .....
Education	AP: .....
Social Services	BT: .....
Highways	XA: .....

EXTERNAL CONSULTATIONS

Adjacent D P A	: .....
Adjacent Parish	: .....
Southern Electricity Board	BN: .....
British Gas	BM: .....
PSA Oil Pipeline	BD: .....
Transco	: .....
Environment Agency	BP: .....
Rail Track	BI: .....
Police Arch. Liaison Officer	PC: .....

HERITAGE BODIES

The Georgian Group	KC: .....
Ancient Monuments Society	KA: .....
Council for British Arch.	KB: .....
RCHME	KF: .....
Telecommunications (NRPB)	: .....
Sport England	: .....

OTHERS: Area of special Landscape Importance
Rural Area
Area of traditional local character

No pre-apps

NEIGHBOURS:

S/N + Snooks Barn, Church Lane, Farley Hill
Elm Cottage, Farley Hill,
The Annexe, Church Lane, Farley Hill
Corner Cottage, Church Lane, Reading

Attn: Emy Circuit
LB/2000/1430 - Proposed infilling of window on gable wall of listed building, Farley Hill Farm, Church Lane, Farley Hill
The Parish Council has no objection to this application.

Attn: Emy Circuit
Application in Hart District:
00/00651/Full - Demolition of s/s bathroom and kitchen extension, garage and outbuildings. Erection of replacement two storey extension with kitchen, utility room and bedroom 3 over. Erection of replacement detached garage & conservatory - Crossways, Mill Lane, Riseley
Swallowfield PC thanks Hart DC for the opportunity to comment on this application and it considers that the alterations are entirely in keeping with the existing building and consequently has no objection to the proposal.

Yours faithfully,

C Adams

Mrs. C. Adams, Clerk

To:
Harold Sanders
Urban Design And Conservation Officer

19 MAY 2000

From: Emy Circuit

Date: 18 May 2000

Application Number: LB/2000/1430

Proposal: Proposed infilling of window on gable wall of listed building..

Site Address:
Farley Hill Farm, Church Lane, Farley Hill, Reading.

Applicant:
Mr Cannon C/O Mc Hallams.

Your observations are required in respect of this application within **7 days** of the above date.

I VERY MUCH SUPPORT THE REMOVAL OF THE WINDOW AND REINSTATEMENT OF WALL AND TIMBER TIE.

A METHOD STATEMENT SHOULD BE PROVIDED NOW, OR AS A CONDITION OF AN APPROVAL TO ESTABLISH HOW BRICKWORK TO GABLE IS SUPPORTED WHEN THE WINDOW IS REMOVED AND METHOD OF JOINTING NEW TIE MEMBER. — DOWELLED — FINE BUT WHAT IS THE JOINT LIKE?

Harold Sanders
CONSERVATION + DESIGN.
24. 05. 00

SWALLOWFIELD PARISH COUNCIL
PENTON COTTAGE
SWALLOWFIELD STREET, SWALLOWFIELD
READING, BERKS, RG7 1QX
Tel: 0118 988 5929 Fax: 0118 988 6443
email: clerk@swallowfieldpc.freeserve.co.uk

PLANNING SERVICES | HPT 29962
POL | TLS
DC | ENF
APP |
CS |
2000

25 May 2000

Planning Dept.
Wokingham District Council
Shute End
Wokingham
Berks RG40 1WR

Attn: Emy Circuit

Dear Sirs,

Application No LB/2000/1430 - Proposed infilling of window on gable wall of listed building, Farley Hill Farm, Church Lane, Farley Hill

As the Parish Council does not meet again until 13th June I am writing to ask if it would be possible to have an extension on the date for our comments to the following day - 14th June (instead of 11th June as stated).

Please would you confirm that this will be in order.

Many thanks.

Yours faithfully,

Mrs. C. Adams, Clerk

ok - left answerphone message 30/5/00

mchallams

12.MAY2000* 1430

consulting engineers

Our Ref: 3331/HD/WDR

structural & civil engineers
building engineers
party wall surveyors

Mr Harold Sanders
Conservation Officer
Wokingham District Council
P.O. Box 157
Shute End
Wokingham
Berkshire

partner:
B S E HINDMARSH
C ENG M I STRUCT E MASI
associate:
R K WEST

25 April 2000

Dear Mr Sanders

Re: Farley Hill Farm Cottage, Church Lane,
Farley Hill, Reading

Further to your letter dated 30 March 2000 we now enclose our completed Application for Listed Building Consent forms together with relevant enclosures for your approval.

Yours sincerely

R K West
Mchallams

Enc.

cc. Mr H Cannon + enclosure
Cunningham Ellis & Buckle – Attention: Louise Kindred + enclosure
RAM Underpinning + enclosure

3 london court the mews east street reading berkshire rg1 4ql **T** 0118 9594 042 **F** 0118 9574 941 **E** ics.mchallams@virgin.net

mchallams

consulting engineers

Our Ref: 3331/HD/WDR

PLANNING SERVICES	HPT
POL	12 MAY 2000
DC	ENF
APP	
CS	
27 APR 2000	
COPIES TO:	ACK:
	FILE:

1430

structural & civil engineers
building engineers
party wall surveyors

partner:
B S E HINDMARSH
C ENG M I STRUCT E MASI
associate:
R K WEST

Mr Harold Sanders
Conservation Officer
Wokingham District Council
P.O. Box 157
Shute End
Wokingham
Berkshire

26 April 2000

Dear Mr Sanders

**Re: Farley Hill Farm Cottage, Church Lane,
Farley Hill, Reading**

We refer to our application for Listed Building Consent submitted yesterday and now enclose five copies of the left hand gable wall photograph which was omitted.

Yours sincerely

R K West
Mchallams

Enc.

cc. Mr H Cannon + enclosure
Cunningham Ellis & Buckle – Attention: Louise Kindred + enclosure
RAM Underpinning + enclosure

3 london court the mews east street reading berkshire rg1 4ql T 0118 9594 042 F 0118 9574 941 E ics.mchallams@virgin.net

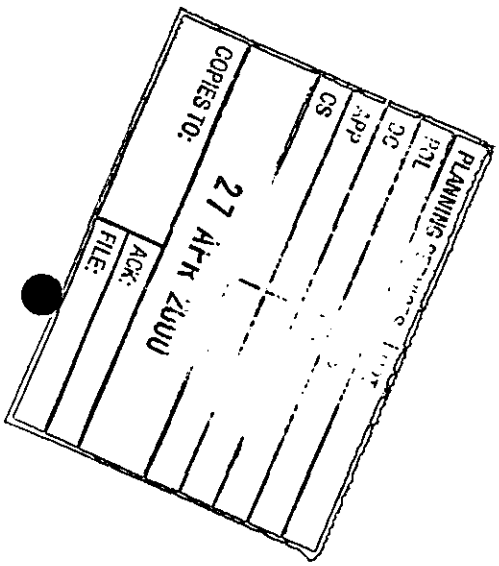

mchallams

1871/A

WOKINGHAM DISTRICT COUNCIL

Application No.

TOWN AND COUNTRY PLANNING ACT 1990 12.MAY2000* 1430

TOWN AND COUNTRY PLANNING (LISTED BUILDINGS AND CONSERVATION AREAS) REGULATIONS 1990

Date Received

APPLICATION FOR LISTED BUILDING CONSENT

Pleas answer ALL QUESTIONS in BLOCK LETTERS. If a question is not applicable, answer N/A in space. Submit FIVE copies of this form and supporting plans, drawings and photographs to:- (See Note 1)

WOKINGHAM DISTRICT COUNCIL
PLANNING DEPARTMENT
P.O. BOX NO. 157
COUNCIL OFFICES
SHUTE END
WOKINGHAM
BERKSHIRE, RE40 1WR

---

1. APPLICANTS NAME: H. CANNON
   ADDRESS: FARLEY HILL FARM. CHURCH LANE FARLEY HILL, BERKS
   POST CODE: RG7 1UP
   PHONE: 0118 973 4541

2. If the applicant has an agent, all correspondence will be send to the agent.
   AGENTS NAME: MCHALLAMS
   ADDRESS: 3 LONDON COURT THE MEWS EAST STREET READING BERKS
   POST CODE: RG1 4QL
   PHONE: 0118 9594042

---

3. (a) The site of the Application Building must be shown EDGED RED on the submitted plans.
   BUILDING LOCATION: FARLEY HILL FARM. CHURCH LANE FARLEY HILL, READING. BERKS.

   (b) What type of building, e.g. barn , dwelling, does the Application relate to.
   BUILDING TYPE: DWELLING

   (c) What is the existing use of the building, if vacant, state this together with last use of the building.
   BUILDING USE: DOMESTIC

   (d) State the grading of the building in the statutory list of Buildings of Special Architectural or Historic interest.
   LISTING GRADE: 2

---

4. List all plans, drawings and photographs submitted with the application. (See Notes 2 - 4)
   ARC No 3331/A1/02 A
   + 1 No. PHOTOGRAPH

---

5. Applicants interest in land?
   e.g. owner, lessee, potential purchaser
   OWNER

---

6. WHAT IS THE APPLICATION FOR?
   Give brief details of the proposed works both internal and external.
   INFILLING OF EXISTING WINDOW TO BEDROOM AT LEFT HAND GABLE WALL

---

7. WHAT MATERIALS ARE TO BE USED IN ANY NEW WORK?
   e.g. state materials and colour of any new walls or roof.
   SECOND HAND BRICKS IN LIME MORTAR WITH EXTERNAL RENDER AND PAINT TO MATCH EXISTING

8. WHAT KIND OF APPLICATION IS THIS?
(See Note 5) tick one box only

Listed Building Consent ☑
Relaxation of Condition ☐
State relevant Listed Building Consent No. _____
Condition(s) to be Relaxed No. _____

9. DOES THE APPLICATION INVOLVE THE FOLLOWING:- (See Note 6)

		YES	NO
(a)	Total demolition of the principal building (See Note 7)	☐	☑
(b)	Demolition of a building in the curtilage of the principal building	☐	☑
(c)	Demolition of a part of the principal building	☐	☑
(d)	Removal of part of the interior of the building (e.g. internal walls, floors, staircases, timber frame).	☐	☑
(e)	Removal of any structure or object fixed to the principal or curtilage building internally or externally (e.g. chimney pieces, balconies, door cases, panelling).	☑	☐

If the answer to any of these questions is **YES** the application must be accompanied by plans, drawings and photographs sufficient to identify the location, extent and character of the items to be removed, and any proposal for their replacement, including any new means of structural support. (These plans should be listed under 4 above).

10. IF THE ANSWER TO NUMBER 9(c) is **YES** (See Note 8)

(a) What is the cubic content of the building as originally listed?
(b) What is the cubic content of the part to be removed? N/A
(c) What was the date (approx.) of the erection of the section to be removed?

11. HAS ANY MONEY GRANT EVER BEEN APPLIED FOR IN RESPECT OF THE BUILDING?
If **YES**, state date, to whom application was made and the result of the application if known. No

I hereby apply for Listed Building Consent in respect of the particularly described above and in the attached plans and drawings. I certify that if Listed Building Consent is granted, I will ensure that the works are carried out strictly in accordance with the approved plans. I am aware that the grant of Listed Building Consent does not obviate the possible requirement for planning permission under the Town and Country Planning Acts, or the need to apply for Building Regulation approval.

Signed R Kendall on behalf of M. CANNON

Date 25 APRIL 2003

Before submitting the application check that it is complete, that all questions have been answered, and the form signed. Every application must be accompanied by the appropriate certificate. (See notes for Guidance for Listed Building consent).

DATE PROTECTION ACT 1984

'Information contained in this form is likely to be personal data within the terms of the Data Protection Act 1984, and as such will be held on the Council computer (such as the PLANAPS applications processing system) and may be used by the Council only for purposes registered under the terms of the Data Protection Act.'

1772A

WOKINGHAM DISTRICT COUNCIL

APPLICATION NUMBER

TOWN AND COUNTRY PLANNING ACT. 1990

LISTED BUILDING CONSENT APPLICATION

12 MAY 2005 1490

TOWN AND COUNTRY PLANNING (LISTED BUILDINGS AND CONSERVATION AREAS) REGULATIONS 1990

CERTIFICATE A

(a) "owner" means a person having a freehold interest or a leasehold interest the unexpired term of which not less than 7 years remain unexpired.

I hereby certify that:-

1. No person other than ~~myself~~/ the applicant was an owner (a) of the building to which the application relates at the beginning of the period of 21 days ending with the date of the accompanying application;

or:-

CERTIFICATE B

I hereby certify that:-

1. *The applicant (I have) has given the requisite notice to all the persons other than *the applicant (myself) who, at the beginning of the period of 21 days ending with the date of the accompanying application were owners† of the building to which the application relates, viz. -

Name of owner	Address	Date of service of notice
N/A.		

or:-

CERTIFICATE C

I hereby certify that:-

1. *The applicant (I am) is unable to issue a certificate in accordance with either sub-paragraph (a) or sub-paragraph (b) of regulation 6 (1) of the Town and Country Planning (Listed Buildings and Conservation Areas) Regulations 1990 accompanying application dated .....

† See note (a) to Certificate A

2. *The applicant (I have) has given the requisite notice to the following persons other than *the applicant (myself) who, at the beginning of the period of 21 days ending with the date of the application, were owners† of any part of the building to which the application relates.

Name of owner	Address	Date of service of notice
N/A.		

3. *The applicant (I have) has taken the steps listed below, being steps reasonably open to *me (him) to ascertain the names and addresses of the other owners† of the building and *have (has) been unable to do so:

(b) Insert description of steps taken

(b) .....

.....

.....

(c) Insert name of local newspaper circulating in the locality in which the land is situated

(d) Insert date of publication (which must not be earlier than 20 days before the application)

4. Notice of the application as set out below has been published in the

(c) .....

(d) on.....

Copy of notice as published SEE OVERLEAF

1772B

or:-

CERTIFICATE D

I hereby certify that:- N/A

1. I am / *The applicant is unable to issue a certificate in accordance with sub-paragraph (a) of Regulation 6 (1) of the Town and Country Planning (Listed Buildings and Conservation Areas) Regulations 1990 in respect of the accompanying application dated

.....

and *have / has taken the steps listed below, being steps reasonably open to *me / him to ascertain the names and addresses of all the persons, other than *myself / himself who, at the beginning of the period of 21 days ending with the date of the application, were owners† of the building to which the application relates and *have / has been unable to do so:

(b) .....

.....

.....

2. Notice of the application as set out below has been published in the

(c) .....

(d) on .....

Copy of notice as published

Signed R K Wood

*On behalf of H. CANNON

Date 25 APRIL 2000

† See note (a) in Certificate A

(b) Insert description of steps taken

(c) Insert name of local newspaper circulating in the locality in which the land is situated

(d) Insert date of publication (which must not be earlier than 20 days before the application)

* Delete where inappropriate

12.MAY2000* 1430

ADDRESS Farley Hill Farm Church Lane PARISH Swallowe.

PLOT No. Farley Hill Farmhouse Listed ORD. SHEET No.

BUILDER

Plan No.	Applicant	Description of Development	Date of Decision	Decision
R/232/70	MR. R. CHANDLER	FARM BLDGS	23.6.70	APP APP
R/569/70	"	EXT. TO STORAGE BLDG	31.12.70	APP APP
41274	MR & MRS. K. NOBLE	2/ST. EXT/CONSERVATORY/STABLE BLOCK	4.10.93	C/A
41275 LBC	MR & MRS K. NOBLE	REPL. WINDOWS/INT. ALTS/ 2/ST. EXT/STABLE BLOCK/ CONSERVATORY/DEM. OF PIGGERY, SHEDS & BARN	4.10.93	C/A
41775	RETRO	SILEAGE CLAMP	15.11.93	C/A
41776	"	MOBILE HOME	17.11.93	REF.
43490	MR ~~[illegible]~~ A CHANDLER	"	17.2.95	28.2.98
43491				
43553	MR. A. CHANDLER	BARN FOR CATTLE	25.11.94	C/A

DATE OF COMPLETION

98/67317/F	"	Erect dwelling to replace caravan	2.6.98	C/A
FP98/7723	"	New dwelling	24.6.98	APP

DRAINAGE

091074

ADDRESS Farley Hill Farm Church Lane

PARISH Swallowe.

PLOT No. Farley Hill Farmhouse Listed

ORD. SHEET No.

BUILDER

Plan No.	Applicant	Description of Development	Date of Decision	Decision
R/232/70	MR. R. CHANDLER	FARM BLDGS	23.6.70	APP APP
R/569/70	"	EXT TO STORAGE BLDG	31.12.70	APP APP
41274	MR & MRS. K. NOBLE	2/ST. EXT/CONSERVATORY/STABLE BLOCK	4.10.93	C/A
41275 LBC	MR & MRS K. NOBLE	REPL. WINDOWS/INT. ALTS/ 2/ST. EXT/STABLE BLOCK/ CONSERVATORY/DEM. OF PIGGERY, SHEDS & BARN	4.10.93	C/A
41775	RETRO	SILAGE CLAMP	15.11.93	C/A
41776	"	MOBILE HOME	17.11.93	Ref.
43490	MR & ~~MRS~~ A CHANDLER	"	17.2.95	28.2.98
43491				
43553	MR. A. CHANDLER	BARN FOR CATTLE	25.11.94	C/A

DATE OF COMPLETION

98/67317/F	"	Erect dwelling to replace caravan	2.6.98	C/A
FP98/7723	"	New dwelling	24.6.98	APP

DRAINAGE

091074



12.MAY2000* 1430

FARLEY HILL FARM COTTAGE

ELEVATION OF LEFT HAND GABLE WALL

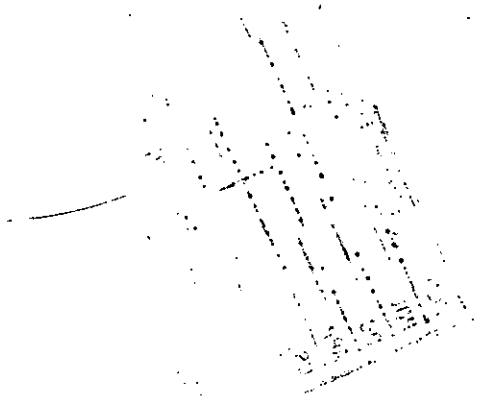

APPROVED

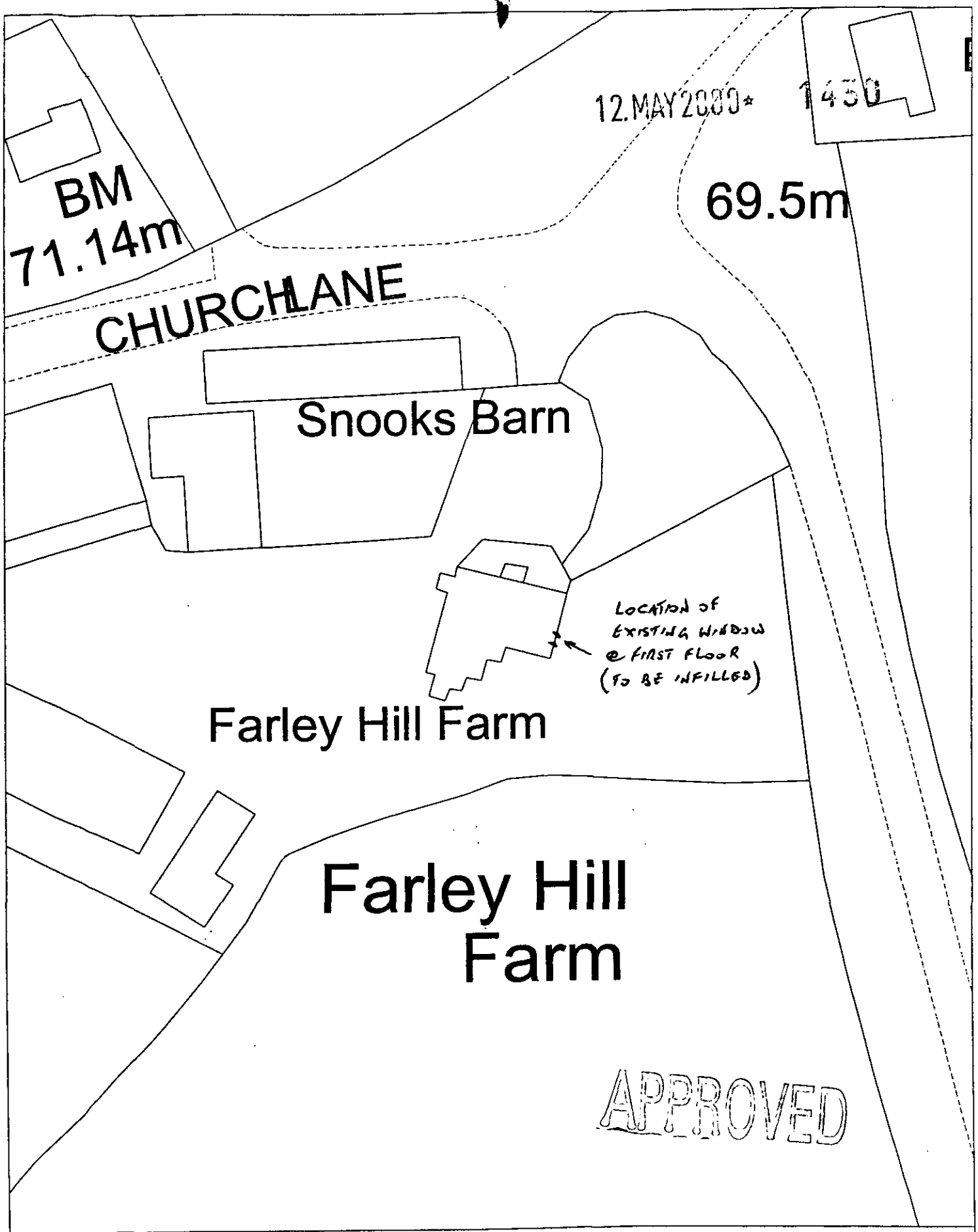

Site Plan, Scale: 1 to 500

This copy has been produced specifically for the map return scheme purposes only. No further copies may be made.

This map is reproduced from Ordnance Survey material with the permission of Ordnance Survey on behalf of the Controller of HMSO Office. © Crown Copyright. Wokingham District Council, Licence No. LA086134

Date: 24 March 2000

N
W E
S

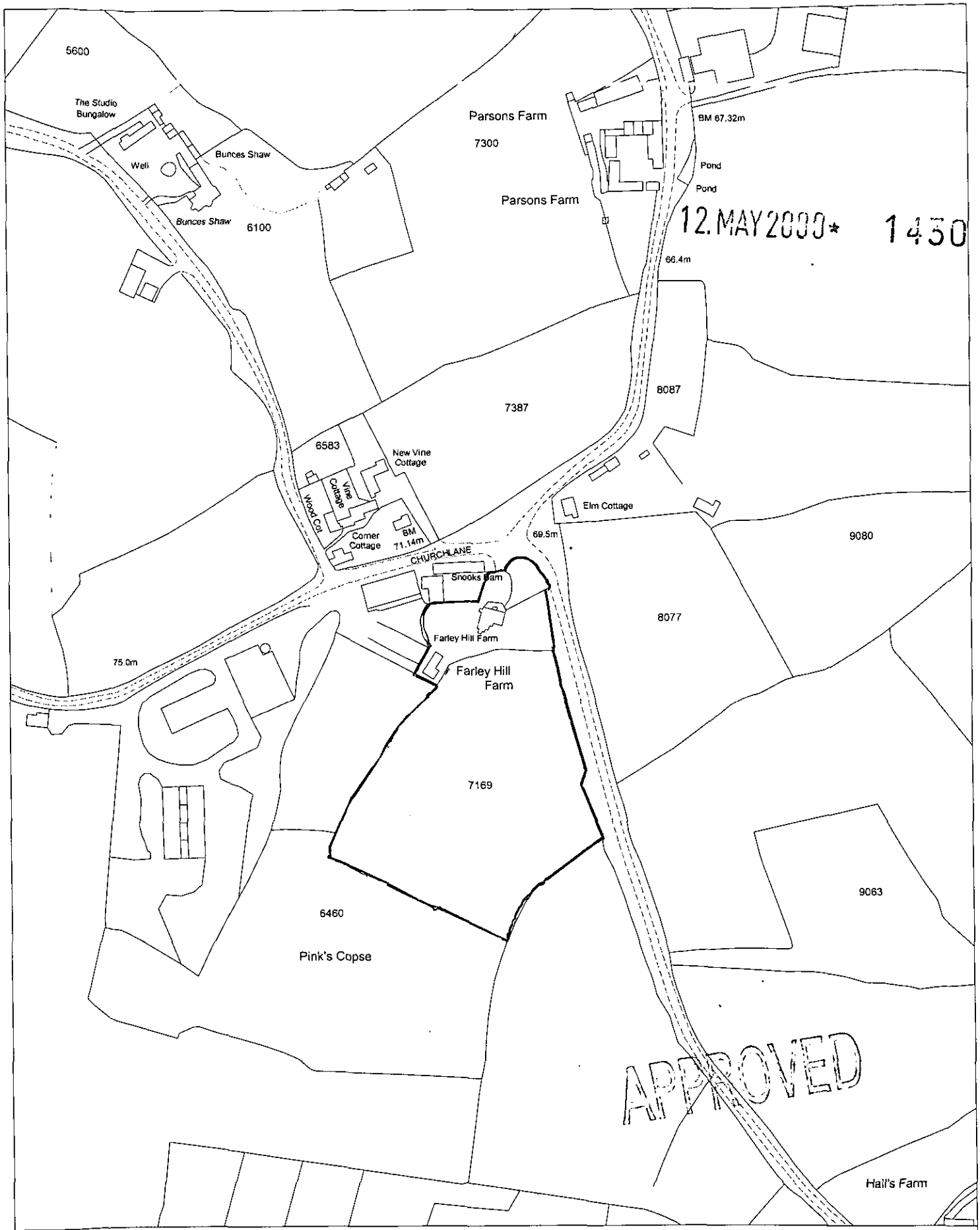

12 MAY 2000* 1450

APPROVED

Site Plan, Scale: 1 to 2500

This copy has been produced specifically for the map return scheme purposes only. No further copies may be made.

This map is reproduced from Ordnance Survey material with the permission of Ordnance Survey on behalf of the Controller of HMSO Office. © Crown Copyright. Wokingham District Council, Licence No. LA086134

Date: 24 March 2000

N W E S