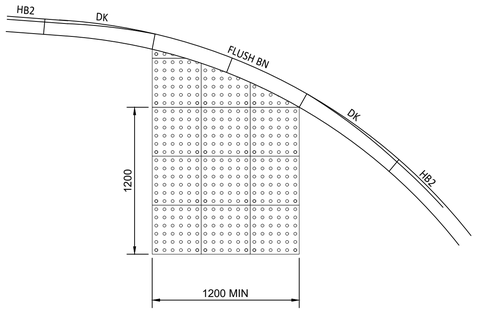

TACTILE PAVING PEDESTRIAN CROSSING AT JUNCTION

SCALE 1:25

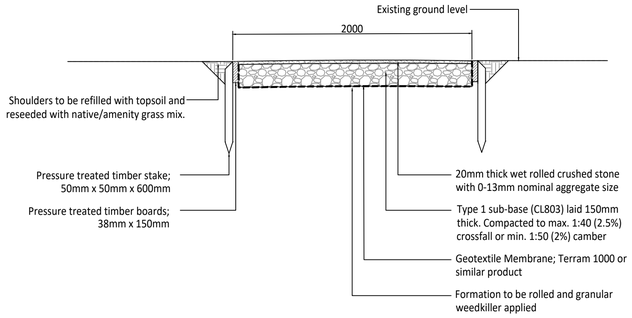

BREEDON GRAVEL PATH CONSTRUCTION DETAIL TIMBER EDGINGS

SCALE 1:25

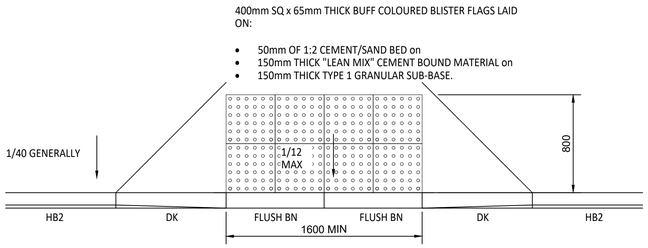

TACTILE PAVING PEDESTRIAN CROSSING POINT AWAY FROM JUNCTIONS

SCALE 1:25

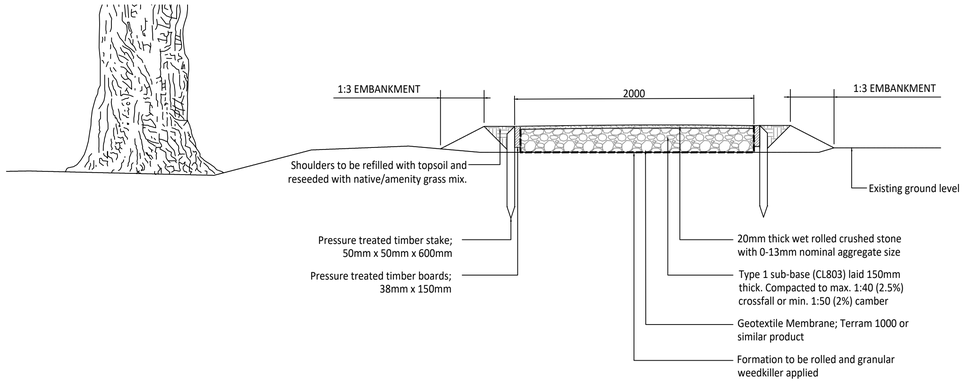

BREEDON GRAVEL PATH NO-DIG CONSTRUCTION

SCALE 1:25

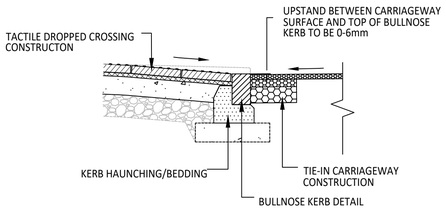

TACTILE PAVING PEDESTRIAN CROSSING

SCALE NTS

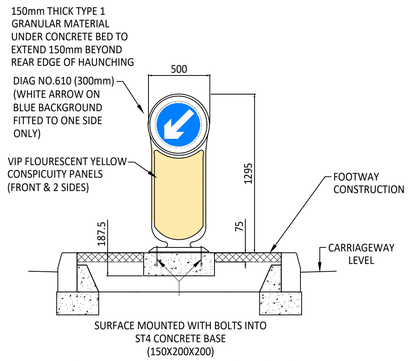

NON ILLUMINATED GLASDON REBOUND BOLLARD

SCALE NTS

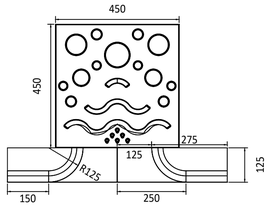

(PLAN VIEW)

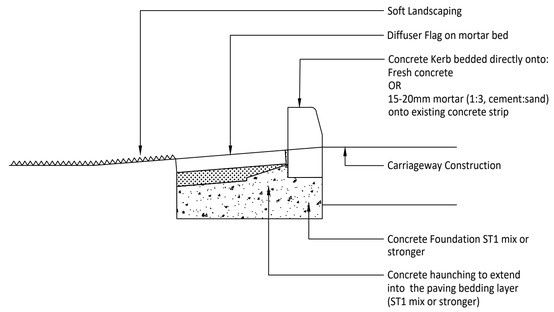

(CROSS-SECTION)

MARSHALLS EDEN KERB DETAIL

SCALE NTS

WOKINGHAM BOROUGH COUNCIL STANDARD DETAIL REFERENCES	
DRAWING NUMBER	DRAWING TITLE
WDS_HD_01	Standard Details Sheet 1 of 4
WDS_HD_04	Standard Details Sheet 4 of 4

© ABLEY LETCHFORD PARTNERSHIP LTD. This drawing should not be reproduced without consent.

GENERAL NOTES:

1. Do not scale.
2. This drawing is to be read in conjunction with and checked against all other drawings, Engineering details, Specification and any structural, Geotechnical or other specialist document provided.
3. Any anomaly or contradiction between any of the above is to be reported to the Engineer.
4. WBC Highway Inspector to be present during inspections/CBR testing.
5. All soft spots and organic material must be removed before construction.
6. If Bituminous layers are not laid immediately after one another, a Bond Coat shall be applied.
7. Tack Coat to be applied to kerb-faces and ironworks prior to bituminous surface course laid.
8. Gravel aggregate will not be permitted in asphaltic concrete.
9. Limestone aggregate will not be permitted in surface course material or binder course material which is to be trafficked.
10. Type 1 material with crushed gravel aggregate shall not be used in the top 150mm below base course level unless permitted by WBC.
11. Use of recycled/reclaimed aggregate material is not permitted unless approved by appointed WBC Engineer.

DYNAMIC CONE PENETROMETER (DCP) OR DYNAMIC PLATE TESTING (DCT) CBR TESTS TO BE CARRIED OUT AT 30m SPACINGS IN LINE WITH LOCAL HIGHWAY AUTHORITY (LHA) AND IAN 73/06 GUIDELINES.

CONTRACTOR TO CONFIRM WITH LHA PREFERRED TEST METHOD (DCP) OR (DCT) AND RESULTS TO BE REPORTED TO LHA AND ENGINEER PRIOR TO COMMENCING TARMAC/PAVING OPERATIONS

SUBJECT TO TECHNICAL APPROVAL

Rev	Date	Description	Drawn	Checked
B	09.26	UPDATED TO SUIT WBC COMMENTS	CLL	RF
A	06.26	FIRST ISSUE	AS	RF

Abley Letchford

www.ableyletchford.co.uk

Client: MILLER HOMES

Project: SOUTH WOKINGHAM SDL PHASE 2B R7 & R13 DETAILED DESIGN

Title: HIGHWAY CONSTRUCTION DETAILS SHEET 2

Status:

Scale	Date	Drawn	Checked
AS SHOWN @ A1	JUNE 2026	AS	RF

Drawing No: A389-R7&R13-CTM-712

Revision: B