X SYSTEMS LTD

APPLICATION NO:
F/2000/1902

LOCATION:
Balcombe Lodge Spring Lane, Swallowfield Reading.

APPLICANT:
Mr P Thompson C/O Peter H Watkins

PROPOSAL:
Proposed two storey rear extension to dwelling.

EARLIEST DATE FOR DECISION: **04/08/2000**

APPLICATION WILL HAVE EXPIRED ON:
29/08/2000

CASE OFFICER: **Emy Circuit**

Appeal Decision

Hearing held on 10 January 2001

The Planning Inspectorate
Room 1404
Tollgate House
Houlton Street
Bristol BS2 9DJ
☎ 0117 987 8927

by J Trevor Graham FRICS

an Inspector appointed by the Secretary of State for the Environment, Transport and the Regions

Date 16 FEB 2001

Appeal Ref: APP/X0360/A/00/1049977
Balcombe Lodge, Spring Lane, Swallowfield, Reading.

- The appeal is made under section 78 of the Town and Country Planning Act 1990 against a refusal to grant planning permission.
- The appeal is made by Mr P Thompson against the decision of Wokingham District Council.
- The application (ref: F/2000/1902), dated 30 June 2000, was refused by notice dated 17 August 2000.
- The development proposed is described as a two storey rear extension to dwelling.

Summary of Decision: The appeal is dismissed.

Main Issues

1. The main issues in this appeal are the effect of the proposed extension on the character and appearance of the dwelling and the surrounding rural area and whether there are exceptional circumstances sufficient to justify such an addition in this area of countryside.

Planning Policy

2. The Development Plan for the area comprises the Berkshire Structure Plan and the Lodden Area Local Plan adopted on 5 May 1995. The Wokingham District Local Plan Deposit Draft is in the second phase of a public inquiry. It is at an advanced stage towards adoption and I afford it due weight in accordance with guidance set out in paragraph 48 of PPG1.

3. Development Plan policies of particular relevance to this appeal include Policies LC1 and LC19 of the adopted Lodden Area Local Plan and Policies WCC1, WCC2 and WCC7 of the Wokingham District Local Plan Deposit Draft.

4. Policy WC1 of the emerging Local Plan indicates that development in the countryside outside settlement boundaries will be strictly controlled and identifies categories of development which will be acceptable in principle.

5. Policies LC1 of the adopted Local Plan and WCC2 of the emerging Local Plan seek to maintain the separation of settlements and state that development will not be permitted in areas defined on the proposals maps which would detract from their undeveloped appearance or intensify existing sporadic development.

6. Policies LC19 and WCC7 refer specifically to extensions to dwellings in rural areas. These policies indicate that minor extensions will normally be accepted but major extensions or proposals that would have an adverse effect on the rural environment will generally not be approved. Where a dwelling has already been extended the cumulative effect of all of the extensions to the original building will be taken into account.

Reasons

7. It is agreed that the property the subject of this appeal lies between the identified settlements of Swallowfield and Riseley, within a defined rural area, specifically identified in the adopted Local Plan as separation of settlements.

8. The planning history of the property extends back to 1980 when permission was granted on appeal for the erection of a bungalow on the site, subject to an occupancy condition. In 1981 permission was granted for a chalet style dwelling, again subject to a condition limiting occupation to a person solely or mainly employed in connection with the Mowbrite-Balcombe Garden Centre, adjacent to the site.

9. In June 1989 permission for extensions was refused. However in November 1989 and again in February 1990, permissions were granted for extensions and the latter was subsequently implemented. In 1995 permission (43129) was granted for retention of the dwelling without compliance with condition 4, the occupancy condition and condition 6, requiring access from the Basingstoke Road only, attached to the 1981 permission (15996).

10. The extensions already carried out have increased the footprint of the original dwelling by some 88% and the total floor area in excess of 70%. These extensions have clearly resulted in major increases in the scale and bulk of the original dwelling. The proposed extensions would result in a further increase of about 81m² to the footprint and 135m² to the total floor area of the dwelling.

11. I acknowledge that views of the dwelling are limited and primarily from Spring Lane. However, in my opinion the scale and bulk of the extensions the subject of this appeal are, on their own, of a very major nature. They would substantially increase the massing of the building and therefore have an adverse effect on the appearance of the countryside, contrary to the policies of the Local Plan and the emerging Local Plan referred to above.

12. I agree that the dwelling would not be out of proportion with the size of plot but that does not in my view justify setting aside the planning policies designed to safeguard the countryside in this sensitive area.

13. I have taken account of all the other matters raised including the untidy appearance of the adjacent former Garden Centre and the needs of the appellants disabled daughter. However, I consider that the scale, layout and detail of the proposed extension shows little regard to the needs of a disabled person and I find nothing sufficient to outweigh the considerations that have led me to my decision.

Conclusions

13. For the reasons given above and having regard to all other matters raised, I conclude that the appeal should be dismissed.

Formal Decision

14. In exercise of the powers transferred to me, I dismiss this appeal.

J Trevor Graham
Inspector



WOKINGHAM DISTRICT COUNCIL

TOWN AND COUNTRY PLANNING ACTS

Notification of Refusal of Permission

Mr P Thompson
C/O Peter H Watkins
48 Broomfield Road
Tilehurst
Berkshire
RG30 6AL

Application Number: F/2000/1902

Parish: **SWALLOWFIELD**

Location: **Balcombe Lodge, Spring Lane, Swallowfield, Reading.**

Proposal: **Proposed two storey rear extension to dwelling.**

The Wokingham District Council in pursuance of their powers under the above Acts and Regulations hereby **Refuse Permission** for carrying out the above development in accordance with the application and the accompanying plans submitted to the Council subject to compliance with the following conditions, the reasons for which are specified hereunder.

Reason

1. The proposed extension, in conjunction with the previous extensions, would result in a cumulative scale of development that would be harmful to the countryside character of the area. The proposals are, therefore, contrary to Policies LC1 and LC19 of the Loddon Area Local Plan and Policies WCC1, WCC2 and WCC7 of the Wokingham District Local Plan (Deposit Draft).

John Mitchell
Development Control Manager
Date: 17/08/2000

If this notice grants permission to proceed with the proposal the applicant is reminded that it relates to planning permission only and does not constitute approval under any other legislation including Building Regulations.

33408

Tel. (0118) 974 6487 (Direct Line)
Fax. (0118) 974 6484
Email. John.Mitchell@wokingham.gov.uk
Date 29 September 2000
My ref. JRM/SB/F/2000/1902
Your ref.

Mr P Watkins
48 Broomfield Road
Tilehurst
READING
Berkshire
RG30 6AL

Environmental Services Department
Planning Services
P.O. Box 157
Shute End, Wokingham
Berkshire RG40 1WR
Switchboard Tel: (0118) 974 6000
Minicom No: (0118) 974 6991
DX: 33506 – Wokingham
http://www.wokingham.gov.uk

Dear Mr Watkins

F/2000/1902 - BALCOMBE LODGE

Thank you for your letter of 22 August 2000 regarding the above. I apologise for the delay in replying.

I note that you disagree with the decision on this planning application but I can assure you it was made for sound planning reasons. Obviously if you consider there may be scope for approval then you could submit an appeal to the Secretary of State for the Environment, Transport & The Regions. The decision notice will explain how to go about this.

Finally, let me assure you that the site was visited.

Thank you for drawing this matter to my attention.

Yours sincerely

JOHN MITCHELL
Development Control Manager

0118 9423696

48 Broomfield Road
Tilehurst
Reading. Rg 30 6AL
22nd. Aug. 2000

REPLY REQUIRED
6/9

PLANNING SERVICES	HPT
POL	TLS
DC	ENF
CS 055	33408 ES
23 AUG 2000	
COPIES TO:	ACK: ✓ FILE:

Re. F 2000/1902 - Balcombe Lodge.

Dear Mr. Mitchell

Can you please explain how one of your officers can issue a Refusal Notice for a property that she has not even seen.

My client has security cameras around his property which would have filmed anyone visiting the property, especially someone without an appointment.

The reason for refusal is that it would be 'harmful to the countryside character of the area'

This is a nonsense as the property is alongside a industrial unit and workshops. clearly identified on the site plan. and

the rear extension proposed can not be seen from any other property.

The rear garden is 1.24 acres

The extension even with the previous extension is less than 50% of the original floor area.

- Either reconsider your decision or send me copies of all documents so that I can start appeal proceedings.

It is also normal practice, if a planning officer does not agree with the size of a application, to have the courtesy to discuss it with the architect to see if a compromise can be reached.

Yours sincerely

P.M. Watts

Section 2

MEANS OF ACCESS WITHIN BUILDINGS OTHER THAN DWELLINGS

Objective

2.1 The objective is similar to that relating to the approach to buildings. The need is to facilitate movement within buildings. Much has to do with the provision of sufficient space for wheelchair manoeuvre, convenient ways of travelling from one storey to another and the inclusion of features which will help those with impaired hearing or sight to find their way safely and conveniently.

2.2 Whilst the guidance included in this Approved Document is not focused entirely on the needs of wheelchair users, the more generous space criteria often relate to the space required to manoeuvre a wheelchair.

Horizontal circulation within the building

Internal doors

Design considerations

2.3 Considerations, similar to those set out in paragraphs 1.32 to 1.34 apply to the design of internal doors.

Provisions

2.4 Requirement M2 will be satisfied if:

a. an internal door contains a leaf which provides a minimum clear opening of not less than 750mm.

b. the space into which the door opens is unobstructed on the side next to the leading edge for at least 300mm, unless the door can be opened by an automatic control, or is in a situation where it may be reasonable to anticipate assistance, e.g. when leaving a fellow guest's hotel bedroom.

c. each doorway across an accessible corridor or passageway is provided with a glazed panel, giving a zone of visibility from a height of 900mm to 1500mm from the finished floor level.

Note: Clear opening widths in excess of 750mm can be achieved by using a 900mm single leaf doorset (770mm clear opening width of leaf) or one leaf of an 1800mm double leaf doorset (820mm clear opening width of door leaf) - as shown in Table 1 of BS 4787: Part 1.

Diagram 9 Internal doorways

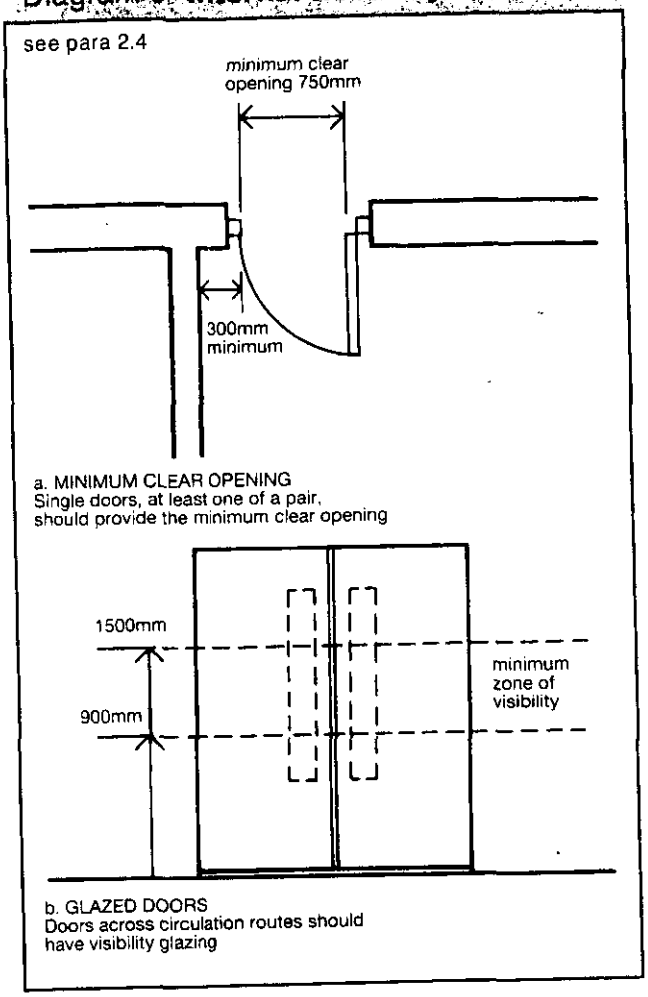

Corridors and passageways

Design considerations

2.5 In locations required to be accessible to wheelchair users, corridors and passageways need to be wide enough to allow for wheelchair manoeuvre and for other people to pass. Narrower corridors would be reasonable in other locations, such as those to which lift access is not provided or in some extensions.

Provisions

2.6 Requirement M2 will be satisfied if a corridor or passageway:

a. to which wheelchair users have access, has an unobstructed width of 1200mm; or

b. which is accessible by stairway alone or is in an extension approached through an existing building has an unobstructed width of at least 1000mm.

Internal lobbies

Design considerations

2.7 Internal lobbies are less likely to be in demand by several people at the same time. It is therefore reasonable to adopt less generous space standards than for principal entrance lobbies. Nevertheless, a wheelchair user should be able to move clear of one door before using the next one. Provided these practical considerations are met, smaller internal lobbies may be used and will impose less constraint on the internal planning of the building.

Provisions

2.8 Requirement M2 will be satisfied if an internal lobby is designed on the basis of the examples shown in Diagram 10.

Vertical circulation within the building

Design considerations

2.9 The most suitable means of access for disabled people when passing from one storey to another is a passenger lift. However, given the added cost and intrusion into usable space it is not reasonable to require a lift to be provided in every instance.

Diagram 10 Internal lobbies

see para 2.8

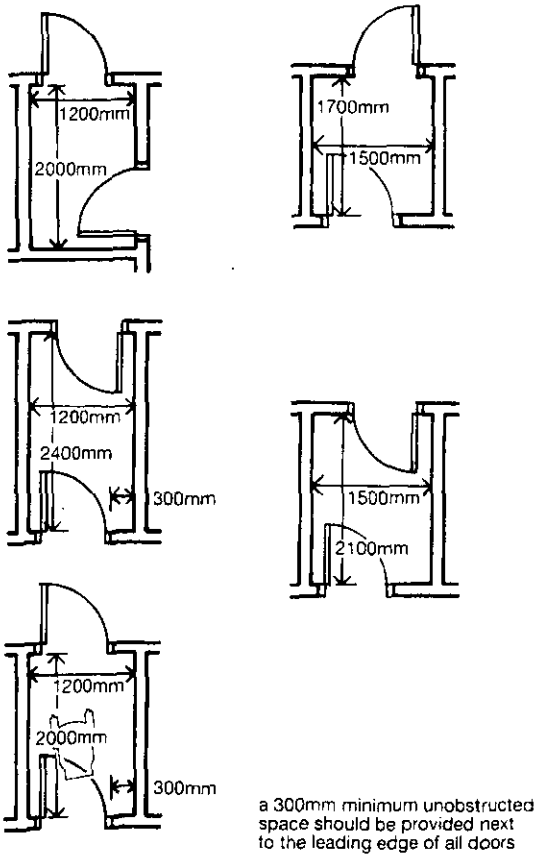

a 300mm minimum unobstructed space should be provided next to the leading edge of all doors

2.10 If there is no passenger lift to provide vertical access, a stair should be designed to satisfy the needs of ambulant disabled people. In any event, a stair should be designed to be suitable for people with impaired sight.

2.11 It would be reasonable to base the decision with regard to the provision of mechanical means of vertical access on the nett floor area of the storey to be reached.

Passenger lifts

Design considerations

2.12 A wheelchair user needs sufficient space and time to manoeuvre into a lift and, once in, should not be restricted for space.

He or she should also be able to reach the controls which summon and direct the lift. People with sensory impairments should, in some circumstances, be advised of the floor that the lift has reached. Measures should be adopted which give a disabled person time to enter the lift to reduce the likelihood of contact with closing doors.

Provisions

2.13 Requirement M2 will be satisfied if a suitable passenger lift is provided to serve any storey above or below the principal entrance storey, and that storey contains nett floor areas as follows:

a. in a two storey building, more than 280m² of nett floor area; or

b. in a building of more than two storeys, more than 200m² of nett floor area; and

c. a suitable means of access is provided from the lift to the remainder of the storey.

Note: The floor area of a storey in a building covered by the Requirement should be measured as follows:-

The area of all parts of a storey which use the same entrance from the street or an indoor mall should be added together, whether they are in more than one part of the same storey, or used for different purposes. The area of any vertical circulation, sanitary accommodation and maintenance areas in the storey should not be included.

2.14 Requirement M2 will be satisfied if a passenger lift:

a. has a clear landing at least 1500mm wide and at least 1500mm long in front of its entrance;

b. has a door or doors which provide a clear opening width of at least 800mm;

c. has a car whose width is at least 1100mm and whose length is at least 1400mm;

d. has landing and car controls which are not less than 900mm and not more than 1200mm above the landing and the car floor at a distance of at least 400mm from the front wall;

e. is accompanied by suitable tactile indication on the landing and adjacent to the lift call button to identify the storey in question;

f. which serves more than three floors, is provided with suitable tactile indication on or adjacent to lift buttons within the car to confirm the door selected;

Diagram 11 Lift dimensions

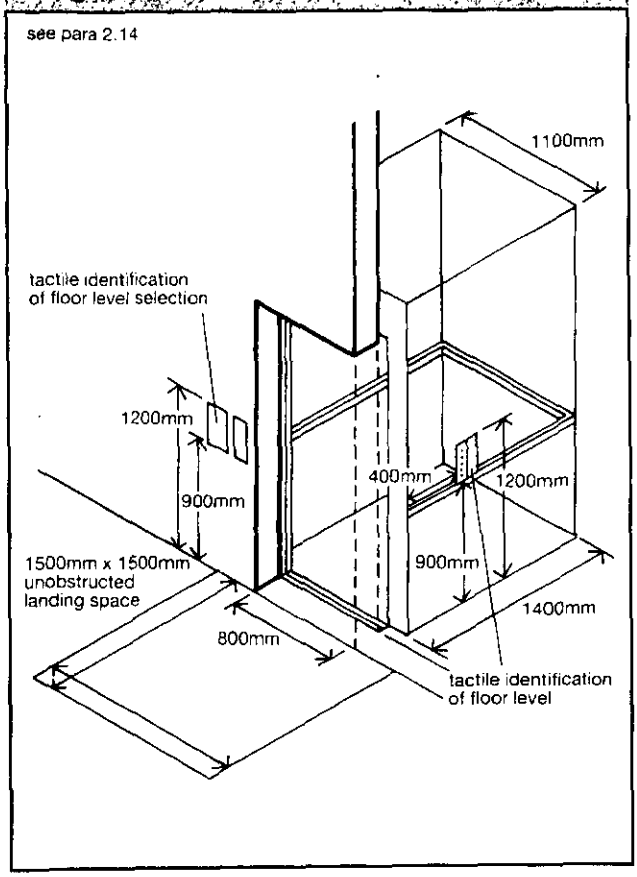

g. which serves more than three storeys, is provided with visual indication and with voice indication of the floor reached; and

h. incorporates a signalling system which gives 5 seconds notification that the lift is answering a landing call and a 'dwell time' of 5 seconds before its doors begin to close after they are fully open: the system may be overridden by a door re-activating device which relies on photo-eye or infra-red methods, but not a door edge pressure system, provided that the minimum time for a lift door to remain fully open is 3 seconds.

Diagram 11 illustrates a suitable passenger lift.

Note: Details of some of these provisions are contained in BS 5655: Parts 1 and 2 also in Part 5: 1989 *Specification for dimensions of standard lift arrangements* and Part 7: 1983 *Specification for manual control devices, indicators and additional fittings*. It is a prerequisite of BS 5655 that automatic doors to passenger lifts should be equipped with re-opening activators. These may be operated through invisible beam or contact with the person.

Wheelchair stairlifts

Design considerations

2.15 In a building containing small areas with a unique function, it may be reasonable to expect access for wheelchair users to upper and lower storeys but be impractical to provide a passenger lift. In such circumstances, a wheelchair stairlift to BS 5776: 1996 *Specification for powered stairlifts* would constitute a reasonable alternative.

A unique facility which anyone using the building should reasonably expect to use may consist, for instance, of a small library gallery, a staff rest room or a training room. In the absence of a practical alternative, it would be reasonable to install a wheelchair stairlift.

Provisions

2.16 If a storey, with a nett floor area exceeding 100m², contains a unique facility but is not large enough to warrant passenger lift access described in paragraph 2.14, it should be accessible to wheelchair users.

Platform lifts

Design considerations

2.17 The provision of a ramp to effect a change in level within a storey would be reasonable, but may have serious planning implications. The problem could be mitigated by using a platform lift: though not at the expense of a stair for use by ambulant people.

Provisions

2.18 Requirement M2 will be satisfied by installing a platform lift if it is impractical to effect a ramped change in level within a storey accessible to wheelchair users. Such provision should complement stair access to effect the same change in level. Guidance relating to the design of platform lifts is contained in BS 6440: 1983 *Powered lifting platforms for use by disabled people.*

Internal stairs

Design considerations

2.19 The design considerations for internal stairs in a building in which a lift is not provided are similar to those for stepped approaches. However, design constraints are likely to be more onerous for internal stairs and they may need to be constructed at steeper pitches and to have less frequent landings. For internal stairs it is not considered reasonable to require the provision of tactile warnings of the onset of changes of level. The nosing of each stair should, however, be distinguishable for the benefit of people with impaired vision.

2.20 If the is no lift access in a building, a stair suitable for people with walking difficulties should be provided. In any event, a stair should be suitable for people with impaired sight.

Provisions

2.21 An internal stair will satisfy Requirement M2 if:

a. it has flights whose unobstructed widths are at least 1000mm;

b. all step nosings are distinguishable through contrasting brightness;

c. the rise of a flight between landings is not more than 1800mm;

d. it has top and bottom and, if necessary, intermediate landings, each of whose lengths is not less than 1200mm clear of any door swing into it;

e. the rise of each step is uniform and not more than 170mm;

f. the going of each step is uniform and not less than 250mm, which for tapered treads should be measured at a point 270mm from the 'inside' of the stair;

g. risers are not open; and

h. there is a suitable continuous handrail on each side of flights and landings if the rise of the stair comprises two or more risers.

2.22 Exceptionally, the provisions of the rise of a flight may be varied if particular storey heights of the need to gain access beneath an intermediate landing dictate, or if the additional length of the stair has unreasonable effects on usable floor areas. In such cases it would be reasonable to provide the number of risers which would satisfy the requirement K1 (see Approved Document K, Stairs, ramps and guards).

Diagram 12 illustrates the guidance on internal stairs.

Diagram 12 Internal stairs

see para 2.21

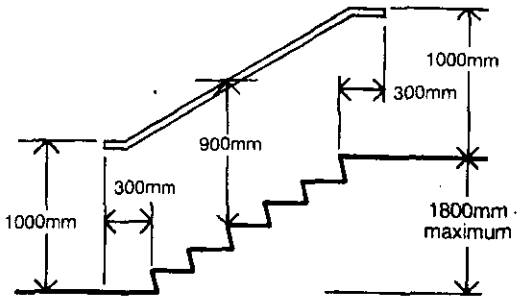

A. INTERNAL STEPS AND HANDRAILS

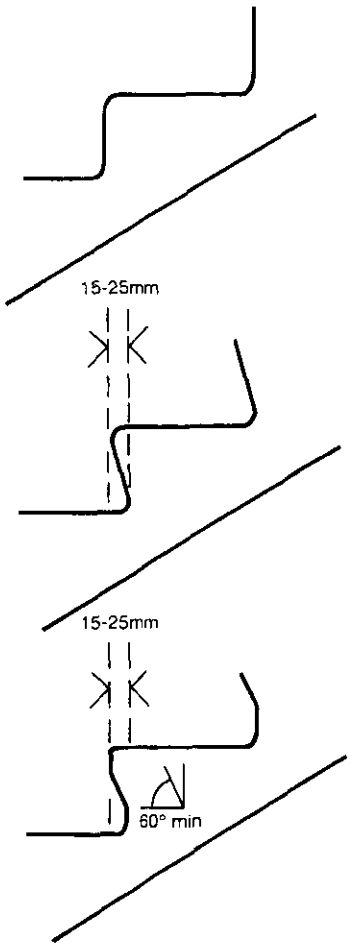

B. EXAMPLES OF SUITABLE TREAD NOSING PROFILES
Maximum rise 170mm
Minimum going 250mm

Internal ramps

Design considerations

2.23 The design considerations for internal ramps are similar to those for ramped approaches.

Provisions

2.24 Requirement M2 will be satisfied if a ramp complies with the provisions contained in paragraph 1.19.

1.00 SITE DESCRIPTION

1.01 Balcombe Lodge is a two-storey detached dwelling, located on a 0.57 hectare site, in a rural area between the Identified Settlements of Swallowfield and Riseley. The area lies within the Countryside and is also designated as a Green Gap, important to the physical and visual separation of settlements.

A site location plan at scale 1:1250 is contained in Appendix 1.

2.00 RELEVANT PLANNING HISTORY

2.01 Outline planning permission for a dwelling on the site was allowed at appeal in 1980 (12007). Permission for a detached, chalet style dwelling, with an integral garage, was granted in 1981 (14852) and a revised application, for a very similar dwelling was permitted later the same year (15996). Permission for the dwelling was granted subject to a condition restricting occupation of the dwelling to a person employed with the management and maintenance of Mowbrite-Balcombe Garden Centre, as development was only considered to be justified to meet a specific need, but an application to relax this condition was approved in 1995 (43129).

2.02 Subsequently, single-storey extensions were added at each end of the property, the integral garage was converted into living accommodation and a detached garage was erected.

2.03 An application to extend the property, including a link to the garage, was refused in 1989 (33259) but in 1989, an application for first-floor extensions above the existing single-storey extensions was permitted (34222) and a similar application was approved and constructed in 1990 (35124).

Copies of the plans and elevations of the original dwelling (15996), the single storey and first-floor extensions (35124) are contained in Appendix 2.

2.02 On 17 August 2000 an application for a two-storey rear extension was refused for the reason that

"The proposed extension, by virtue of its scale and massing, would result in a cumulative scale of development that would be harmful to the countryside character of the area. The proposals are, therefore, contrary to policies LC1 and LC19 of the LALP and Policies WCC1, WCC2 and WCC7 of the WDLPDD."

3.00 POLICY BACKGROUND

3.01 The development plan for the area comprises of the Berkshire Structure Plan and the Loddon Local Plan. There is also an emerging district wide local plan.

3.02 The Loddon Area Local Plan (LALP) was adopted on 5 May 1995 and, on 26 November 1996, the Planing and Transportation Committee resolved that it should continue to carry weight as the most up to date adopted plan, except in relation to housing provision. The following LALP policies are relevant to this appeal.

LC1 Separation of Settlements

LC19 Extensions to Existing Dwellings in Rural Areas

A copy of these policies is contained in Appendix 3.

3.03 The emerging local plan is the Wokingham District Local Plan Deposit Draft. Berkshire County Council issued a statement of general conformity with the structure plan in May 1997 and the plan was placed on deposit in 21 October 1997. The first phase of the Public Local Inquiry into the emerging plan took place between October 1998 and

October 1999 and the second phase commenced in February 2000 and is ongoing. The following policy is relevant to this appeal:

WCC1 Development in the countryside (Outside the Metropolitan Green Belt)

WCC2 Green Gaps and Wedges (Outside the Metropolitan Green Belt)

WCC7 Extensions to Dwellings in the Countryside (Outside the Metropolitan Green Belt)

At Deposit

A copy of these policies is contained in Appendix 4.

4.00 THE COUNCIL'S CASE

4.01 Policy WCC1 of the emerging local plan establishes that development outside the boundaries of the Identified Settlements will be strictly controlled and, where development is acceptable in principle, it should be appropriate in scale, form, materials, design and character to its location. Policies LC2 of the adopted local plan and WCC2 of the emerging local plan identify areas with an open, countryside appearance and character, which are particularly important in maintaining the landscape setting and physical separation of settlements.

4.02 Policies LC19 of the LALP and WCC7 of the WDLPDD relate to extensions to existing rural dwellings. Extensions may be acceptable providing that they do not result in a significant alteration in the scale of the dwelling and development on the site and that their design and siting does not have an adverse impact on the character of the surrounding countryside.

4.03 The initial development of a dwelling on the appeal site was only considered justified to meet a particular need. The original dwelling was a chalet style property, with a low eaves line, which reduced its massing. It had an L-shaped footprint with a ground-floor area of 94m^2, including an integral garage. The internal layout, and hence the amount of internal void space, has changed over time but it appears that the first-floor area would have been about 75m^2, giving a total internal floor area of around 169m^2. Single-storey extensions at either end of the property increased the footprint and floor area of the property by 83m^2 and the width by 11.8 metres, from 13.6 metres to 25.4 metres. The scale of development on the site was further increased as the integral garage was converted to living accommodation and a large detached garage was erected, about 5 metres from the dwelling. The table below sets out the individual and cumulative impact that each extension has had on the scale of the dwelling.

App^n No	Development	footprint			total floorspace		
		increase	cumulative	total	increase	cumulative	total
15996	dwelling with integral garage	-	-	94m^2	-	-	196m^2
	single-storey extensions	83m^2 (88%)	83m^2 (88%)	177m^2	83m^2 (42%)	83m^2 (42%)	279m^2
	garage	57m^2	-	-	57m^2	-	-
35124	first-floor extensions	-	83m^2 (88%)	177m^2	61m^2 (31%)	144m^2 (73%)	340m^2
F/2000/1902	proposed two-storey extensions	81m^2 (86%)	164m^2 (174%)	258m^2	135m^2 (69%)	279m^2 (142%)	475m^2

4.04 Thus, there has already been an 83m^2 (88%) increase in the footprint and a 144m^2 (73%) increase in the floor area of the dwelling. The current proposals would result in an further increase of 81m^2 (86%) in the footprint and 135m^2 (69%) in the area of the original dwelling. In isolation this would represent a significant increase in the scale of the dwelling and cumulatively there would be an increase of 164m^2

(174%) in the footprint and 279m^2 (142%) in the area of the house. The detached garage also contributes to the increase in the scale of development on the site. The cumulative increase in the scale of the dwelling and of development on the site, which would result from the proposal, cannot be considered as small scale and is, therefore, contrary to policy.

4.05 Furthermore, the main part of the extension would be 4.02 metres deep and 18.8 metres wide at ground-floor level, 15.8 metres wide at first-floor level. It's design incorporates a number of gables in the rear of the property and this would result in a considerably more bulky appearance than the existing property, which has mainly dormer windows at first-floor level. The scale and massing of the proposals would be particularly conspicuous as the rear of the house is visible from Spring Lane.

5.00 COMMENTS ON THE APPELLANT'S GROUNDS OF APPEAL

5.01 .

5.02 .

5.03

6.00 CONCLUSION

6.01 . As such it would be contrary to the policies cited and for this reason, the Inspector is respectfully requested to dismiss the appeal.

LIST OF APPENDICES

1. Location plan at 1:1250.

2. Copies of Plans and Elevations of the Original Dwelling and Previous Extensions.

3. Extracts from the Loddon Area Local Plan.

4. Extracts from the Wokingham District Local Plan Deposit Draft.

APPENDIX 1 -
Location plan at 1:1250.

APPENDIX 2 -
Copies of Plans and Elevations of the Original Dwelling and Previous Extensions.

APPENDIX 3 -

Extracts from the Loddon Area Local Plan.

APPENDIX 4 -
Extracts from the Wokingham District Local Plan Deposit Draft.

0118-9423696

PLANNING SERVICES	RPT
POL	TLS
DC	ENF
APP	
CS	
11 SEP 2000	
COPIES TO: JRM.	ACK:
	FILE:

48 BROOMFIELD ROAD
TILEHURST,
READING, RG 306AC
6th. SEPT. 2000

Dear Mr. Mitchell

REF. BALCOMBE LODGE, SPRING LANE, SWALLOWFIELD.
REF F 2000/1902.

Further to my recent letter, which still awaits a satisfactory reply, I contacted the planning officer to discuss what would be an acceptable size of extension only to be informed that no extension of any size would be considered.

It has therefore been necessary to appeal to the planning inspectorate, a copy of which is enclosed.

REF The Lilacs, LONGWATER LANE, FINGHAMSTEAD

This application should have had a decision by the end of July, but I have now learnt, only via my client, that it was to be referred to the Planning Committee today.

It would have been helpful to have had prior notice of this meeting and indeed an invitation to speak at the meeting which is council policy.

This is just another example of the incompetence of your department.

REF. 242 KINGFISHER DRIVE, WOODLEY

The enclosed memo is typical of the sort of request by your planning sectio.

A garage is a garage and even the most stupid of people can work out what the floor plan would be especially when the fon elevation are shown and also a site plan.

Perhaps you should instruct your staff to apply a little common sense and stop wasting council time and money but more important to stop wasting mine.

My clients pay very dearly for a service which they feel they are not receiving and when I relate the type of requests I receive they are not amused.

Yours sincerely

P.W. Wall

Tel: (0118) 974 6479 (Direct Line)
Fax: (0118) 974 6484
Email: Emy.Circuit@wokingham.gov.uk
Date: 6 September 2000
My ref: EXC/F/2000/1902

Mr P Watkins
48 Broomfield Toad
Tilehurst
READING
RG30 6AL

Environmental Services Department
Planning Services
P.O. Box 157
Shute End, Wokingham
Berkshire RG40 1WR
Tel: (0118) 974 6000
Fax: (0118) 974 6484
Minicom No: (0118) 974 6991
DX: 33506 – Wokingham

Dear Mr Watkins

BALCOMBE LODGE, SPRING LANE, SWALLOWFIELD – F/2000/1902

Please find enclosed a copy of the application form for the above application, as requested, and a receipt for the copying fee.

I can confirm that, while it was not possible to obtain access to the rear garden of the property when I made the site visit, this was not necessary as there are clear views of the back of the house from Spring Lane.

I hope this answers your queries. If I can be of any further assistance please contact me on the number above.

Yours sincerely

Emy Circuit,
Planning Assistant, Development Control

File: Balcombe Lodge. Spring Lane.doc

0118 9423696 reply 33903 48 BROOMFIELD ROAD
EXC TILEHURST
READING R.G30 6AL
5th. SEPT 2000

RE. BALCOMBE LODGE
SPRING LANE, SWALLOWFIELD

Dear Miss. Circuit.

Please find enclosed a cheque for 60p. to pay for copies of the original application and ownership certificate.

Can you also let me know how you reached your decision without gaining access to the site?

There are security cameras to the rear of the property and they are regularly checked so if a visit had been made my client would have been aware of it.

Your rigid and unreasonable

response to 'any extension' will be mentioned in the appeal

Yours sincerely

P. M. Watt

REFUSED Refused

DEVELOPMENT CONTROL/BUILDING CONTROL CHECKLIST

CHECKLIST WHEN A BUILDING REGULATION APPLICATION HAS BEEN RECEIVED.

SITE DETAILS	CASE OFFICER
PLANNING APPLICATION NUMBER	1902 EXC
BUILDING CONTROL NUMBER.	FP 2000/0830 Howard
~~APPLICANT~~/AGENT	Peter H. Watkins
ADDRESS OF SITE	Balcombe Lodge Spring Lane, SCHALLOWFIELD
DESCRIPTION OF PROPOSED WORK	2 storey rear ext

DRAWING NUMBERS	BC	DC
BLOCK PLAN		
ELEVATIONS		
FLOOR PLANS		

CHECKLIST	1ST CHECK	2ND CHECK
PERMITTED DEVELOPMENT		
APPLIC. NECESSARY-NOT RECEIVED		
APPLIC.RECEIVED & APPROVED		
APPLIC.RECEIVED-NO DECISION		
APPLIC.REFUSED	17/8/00.	
DIFFERENCES BETWEEN DC/BC DRAWINGS		
IF YES, WHAT ARE THE DIFFERENCES ?		
DATE	24/8/00.	

PROBLEMS	REQUESTED	RECEIVED	REMINDER
PLANNING PERMISSION NEEDED			
REVISED PLANS NEEDED			
PLANNING APPLIC.REFUSED	✓		
WAIT FOR PLANNING DECISION			

COMMENCED ON SITE	
NO PLANNING DECISION	
NO PLANNING APPLICATION	

Date: 31 July 2000

To: Highways

We have received Additional Plans for the following planning application:

Application Number: F/2000/1902

Location: Balcombe Lodge, Spring Lane, Swallowfield, Reading.

Proposal: Proposed two storey rear extension to dwelling.

Applicant: Mr P Thompson C/O Peter H Watkins.

Case Officer: Emy Circuit

The new plans show the following: Parking layout showing 8 spaces in addition to the garage.

Comments are required by 10/08/2000.

Should you have any queries regarding this application please contact the case officer Emy Circuit on (0118) 974 6479.

CONDITIONAL APPROVAL

Sc.23 (Parking & Garaging).

SR 06.

ADAM COSSINS – 04/08/00.

32350

TO: Emy Circuit
DATE: 26 July 2000

COPIES TO: ACK: FILE:

SWALLOWFIELD PARISH CONSULTATION SHEET

Application Number: F/2000/1902

Proposal: Proposed two storey rear extension to dwelling

Site Address: Balcome Lodge, Spring Lane, Swallowfield

The Parish Council notes that this is a large dwelling which will, if this application is granted, be increased substantially in size.

However, the Parish Council considers that the new rear elevation will give the dwelling on interesting character and that overall the endangered dwelling will be no more visually intrusive on the local landscape than the existing dwelling.

The Parish Council therefore has no objection to this application.

SIGNED: C Adams DATE: 26/7/00

Clerk to Swallowfield Parish Council

PLANNING SERVICES
POL
DC
APP
CS
09 AUG 2000
COPIES TO:
ACK:
FILE:

Attn: Angela Odell
F/2000/1999 - Proposed two storey side extension to form new showroom and office, Blanke Villa, Lambs Lane, Spencers Wood

Given that this is currently a commercial site, the Parish Council does not consider that the proposed showroom and office will further detract from the visual amenity of the area.

However, the Parish Council is concerned that:
a) this proposal will generate additional traffic along a rural road, and
b) given that no additional parking off street is proposed beyond the existing that there may be a risk that there is insufficient off street parking at peak periods, causing on street parking and the consequent congestion of thie highway.

Attn: Emy Circuit
F/2000/1902 Balcombe Lodge, Spring Lane, Swallowfield - New Plans showing parking layout

The Parish Council is content with the proposed parking arrangements.

Attn: Angela Odell
F/2000/1506 Land at Sheerlands Road, Arborfield - revised plans showing alteration of number of proposed units.

The Parish Council does not consider that this variation affects the overall consequence of the development on this site to any appreciable extent and therefore stands by its original comments.

Attn: Angela Odell
VAR/2000/1812 New Stables, School Lane, Riseley - red line round Plot 3

The Parish Council stands by its strong objection to this proposal and would like to reiterate that the plan is inaccurate regarding the access and there is now some confusion being made as to which is Plot 1 and which is Plot 3. The Parish Council assumes that the drawing as provided is incorrect - but this must be clarified.

Yours faithfully,

C Adams

Mrs. C. Adams, Clerk

SWALLOWFIELD P C
9:AUG. 2000 9:37 SWALLOWFIELD PARISH COUNCIL NO.0711 P. 3/3

RECORD OF SITE VISIT

SITE ADDRESS: Balcombe Lodge
Spring Lane Swallowfield Reading.

APPLICATION NUMBER: F/2000/1902

OFFICER: Emy Circuit

DATE OF SITE VISIT: 18 July 2000

1 SITE/STATUTORY NOTICE DISPLAYED ? No

2. DESCRIPTION OF SURROUNDINGS two-storey dw
rural setting

3. DESCRIPTION OF SITE/BUILDING
two-storey detached dwelling

4. RELATIONSHIP TO ADJOINING PROPERTIES
none affected
broken views from Spring Lane

5. SITE CONSTRAINTS

TREES

ACCESS/PARKING

LEVELS

BOUNDARY TREATMENT

OTHERS

H.M. LAND REGISTRY		TITLE NUMBER BK211125	
ORDNANCE SURVEY PLAN REFERENCE	SU7164	SECTION A	Scale 1:1250 Enlarged from 1:2500
COUNTY BERKSHIRE	DISTRICT WOKINGHAM		© Crown copyright 1978

SWALLOWFIELD PARISH

The boundaries shown by dotted lines have been plotted from the transfer plan. The title plan may be updated from later survey information.

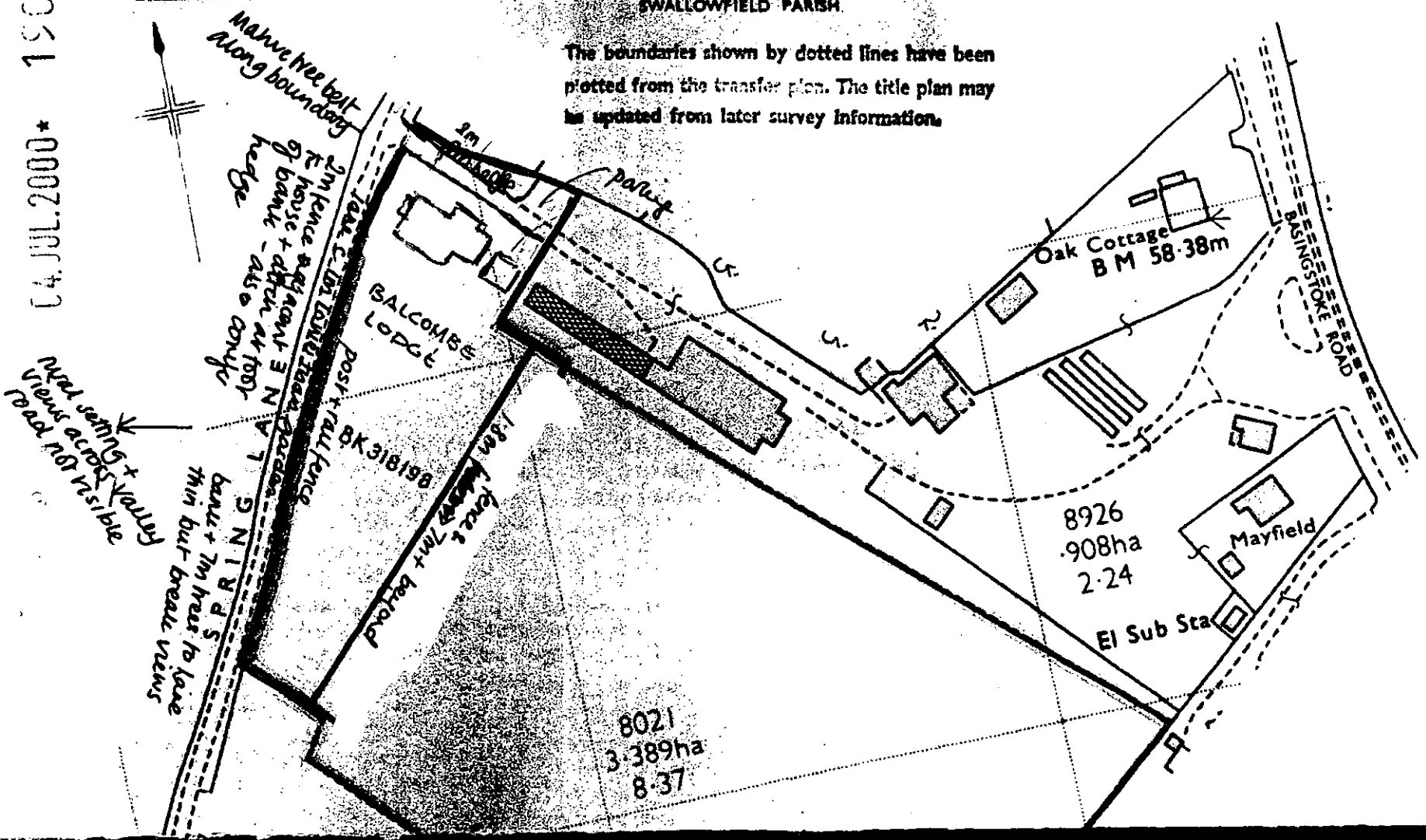

04.JUL.2000* 1902

WORK SHEET FOR : Emy Circuit

Application Number : F/2000/1902

Applicant : Mr P Thompson C/O Peter H Watkins.

Location : Balcombe Lodge, Spring Lane, Swallowfield, Reading.

Proposal : Proposed two storey rear extension to dwelling.

Site Notice Displayed ? : YES [ ] NO [✓] DATE [ ]

Date of Neighbour Notifications : .....

Date of Site Visit : 18 July 2000

Date Registered : 04/07/2000

Earliest Date for Decision : 04/08/2000

Latest Consultation Date/Site Notice Expiry Date : 04/08/2000

This application will have expired on: 29/08/2000. You need to make a decision 1 day prior to this date for this application to count as determined in less than 8 weeks.

Consultation Responses :

Highways - request layout + Sc23/SR06 parking and garaging

Swallowfield PC - large dwelling + would result in substantial increase but would add interest + would not be more visually intrusive. content with parking

Planning Issues :

Countryside / Gap / Separation of Settlements

Neighbours / character of area / Str scene

Application Number: F/2000/1902
Balcombe Lodge, Spring Lane, Swallowfield

Appraisal: The proposal is for a two-storey extension to a two-storey dwelling, located in the Countryside and Green Gap.

Outline planning permission for a dwelling on the site was allowed at appeal in 1980. Planning permission for a detached, chalet style dwelling, with an integral garage, was granted in 1981 (14852) and a revised application, for a very similar dwelling was permitted later the same year (15996). The original dwelling, including the garage, had a footprint of $94m^2$. It is difficult to calculate the first-floor area accurately as the layout, and hence the amount of internal void space, has changed over time but it appears that it would have been about $75m^2$, giving a total of around $169m^2$. Permission was granted subject to a condition restricting occupation of the dwelling to a person employed with the management and maintenance of Mowbrite-Balcombe Garden Centre, as development was only considered to be justified to meet a specific need, but an application to relax this condition was approved in 1995 (43129).

Subsequently, single-storey extensions were added at each end of the property, the integral garage was converted into living accommodation and a detached garage was erected about 5 metres to the side of the dwelling.

An application to extend the property, including a link to the garage, was refused in 1989 (33259) but a subsequent application for first-floor extensions above the existing single-storey extensions was permitted in 1989 (34222) and a similar application was approved and constructed in 1990 (35124). The table below sets out the individual and cumulative impact that each extension has had on the scale of the dwelling.

App^n No	Development	footprint			area		
		increase	cumulative	total	increase	cumulative	total
15996	dwelling with integral garage	-	-	$94m^2$	-	-	$196m^2$
	single-storey extensions	$83m^2$ (88%)	$83m^2$ (88%)	$177m^2$	$83m^2$ (42%)	$83m^2$ (42%)	$279m^2$
	garage	$57m^2$	-	-	$57m^2$	-	-
35124	first-floor extensions	-	$83m^2$ (88%)	$177m^2$	$61m^2$ (31%)	$144m^2$ (73%)	$340m^2$
F/2000/1902	proposed two-storey extensions	$81m^2$ (86%)	$164m^2$ (174%)	$258m^2$	$135m^2$ (69%)	$279m^2$ (142%)	$475m^2$

Thus, there has already been an $83m^2$ (88%) increase in the footprint and a $144m^2$ (73%) increase in the floor area of the dwelling. The current proposals would result in an further increase of $81m^2$ (86%) in the footprint and $135m^2$ (69%) in the area of the original dwelling. In isolation this would represent a significant increase in the scale of the dwelling and cumulatively there would be an increase of $164m^2$ (174%) in the footprint and $279m^2$ (142%) in the area of the house. The detached garage also contributes to the increase in the scale of development on the site. The cumulative increase in the scale of the dwelling and of development on the site, which would result from the proposal, cannot be considered as small scale and is, therefore, contrary to policy.

Furthermore, the main part of the extension would be 4.02 metres deep and 18.8 metres wide at ground-floor level, 15.8 metres wide at first-floor level. It's design incorporates a number of gables in the rear of the property and this would result in a considerably more bulky appearance than the existing property, which has mainly dormer windows at first-floor level. The scale and massing of the proposals would be particularly conspicuous as the rear of the house is visible from Spring Lane.

Recommendation: refusal

Application Number F/2000/1902
Conditions/Reasons for Refusal

No	Std Con	Std Reas	Non Std Conditions / Reasons for Refusal

The proposed extension, in conjunction with the previous extensions, would result in a cumulative scale of development that would be harmful to the countryside character of the area. The proposals are, therefore, contrary to policies LC1 and LC19 of the LALP and Policies WCC1, WCC2 and WCC7 of the WDLPDD.

17/8/00

Received by Wokingham District Council

Application No: F/2000/1902

Proposal:
Proposed two storey rear extension to dwelling.

Location:
Balcombe Lodge, Spring Lane, Swallowfield, Reading.

The application is available for inspection at Wokingham District Council's offices during the following times:

PLANNING DEPARTMENT, SHUTE END, WOKINGHAM TEL (0118) 974 6428
8.30 - 5.00 Monday - Thursday & 8.30 - 4.00 Friday

WOODLEY LIBRARY HEADLEY ROAD WOODLEY (9.30am - 7.00pm Mon, Thurs & Fri. 9.30am - 5.00pm Tues, 9.30am - 1.00pm Saturday. closed all day Wednesday). If you intend to view this application at Woodley Library (see details above) please allow 4 days from the date of this notice for delivery of plans.

Comments should be sent in writing QUOTING THE APPLICATION NUMBER to the Case Officer Emy Circuit P.O. Box 157 Council Offices, Shute End, Wokingham Berkshire, RG40 1WR to arrive on or before 04/08/2000. Written comments submitted will become available for public inspection.

In view of the very large number of planning applications and letters of comment received, it will not normally be possible for an individual reply to observations made. However any comments will be taken into account when the application is determined and you will be notified of the decision.

Head Planning and Transportation

11 July 2000

**********FILE COPY**********

Tel: (0118) 974 6479

Date: **11 July 2000**

My ref: F/2000/1902

CONFIDENTIAL

Councillor Beatty
The Lieutenants Cottage
Three Mile Cross
Reading
RG7 1AP

Environmental Services Department
Planning Services
P.O. Box 157
Shute End, Wokingham
Berkshire RG40 1WR
Tel: (0118) 974 6000
Fax: (0118) 974 6484
Minicom No: (0118) 974 6991
DX: 33506 – Wokingham

Dear Councillor

Application Number: F/2000/1902
Balcombe Lodge, Spring Lane, Swallowfield, Reading.
Proposed two storey rear extension to dwelling.

I write to let you know that the above mentioned house holder application has been received

At this stage a recommendation has not yet been made. This form should only be returned if it is likely that you may wish the application to be listed for consideration by the Development Control Sub-Committee. This form must be received no later than 28 days from the date of this letter.

If you have any questions please do not hesitate to contact **Emy Circuit** on **(0118) 974 6479**.

Yours faithfully,

John Mitchell

John Mitchell
Development Control Manager

LISTING FORM

Case officer: **Emy Circuit** Application Number: **F/2000/1902**
Balcombe Lodge, Spring Lane, Swallowfield, Reading.
Proposed two storey rear extension to dwelling.
I wish this application to be listed should the officers recommendation be for_____
and my reason(s) are_____
_____
_____

Signed: _____ Date: _____
Councillor Beatty

**********FILE COPY**********

WOKINGHAM D.C. DEVELOPMENT CONTROL

~~104102~~

Start date:	04 JUL 2000
Officer: EXC	Application No. F/2000/1902

Map No. 102 **Site** 0:57

Easting: ..... Flood Pln .....

Northing: ..... Mineral .....

Level: ☐ **Sub Committee** ☑ **Delegated** ☐ **Sec. State**

☐ **Incorrect Fee** ☐ **Invalid** ☐ **PD**

Description:
(F) PROPOSED TWO STOREY REAR EXTENSION TO DWELLING

Location: BARCOMBE LODGE SPRING LANE

Parish: SWALLOWFIELD Ward: Swallowfield 11.7.2000

Applicant: MR P THOMPSON

Joint cheque with B/control

Fee Received 95.00 Required ..... Additional ..... Refund .....

Enforcement Section to be notified ☐ tick if required

Additional information required for validation

		Reason	Requested	Received
1	1:2500 OS location plan showing property edged in blue/red			
2	1:500 block plan showing existing & proposed dev. + adj. Properties			
3	Forms unsigned			
4	Correct S 66 certificate			
5	Elevation plans			
6	Floor plans	Ensuite bathroom for master bedroom — no door or windows shown.		11.7.
7	Metric scale disclaimer			
8	Encroachment letter			
9	Miscellaneous			

APPLN NO. _____

ACTION REQUIRED BY DEVELOPMENT CONTROL

Conservation Area .....

Listed Building 1 2 2*

Advertisement Required .....

Date Site Notice Sent : 11.7.2000 V 11/7

Parish Council Informed - YES / NO V 11/7

INTERNAL CONSULTATIONS

Building Control .....
Landscape .....
Trees .....
Conservation Officer .....
Environmental Health .....
Housing .....
Leisure & Cultural services .....
Public Rights of Way .....
Property .....
District Secretary (only if called in by SOS) .....
Policy & Plans .....
Strategic Planning (JSPU) .....
Minerals (BABTIE) .....
Archaeological Site (BABTIE) .....
Education .....
Social Services .....
Highways V 11/7 .....

EXTERNAL CONSULTATIONS

Adjacent D P A .....
Adjacent Parish .....
Southern Electricity Board .....
British Gas .....
PSA Oil Pipeline .....
Transco .....
Environment Agency .....

Rail Track .....
Police Arch. Liaison Officer .....

HERITAGE BODIES

The Georgian Group .....
Ancient Monuments Society .....
Council for British Arch. .....
RCHME .....
Telecommunications (NRPB) .....
Sport England .....

OTHERS: (Rural area)

.....

.....

No pre-apps

.....

NEIGHBOURS:

11/7 S/N + Queen Anne's mead, Spring Lane, Swallowfield ✓
Brandy well, Spring Lane
+ property marked (X) on map

Date: 31 July 2000

To: Case Officer

We have received Additional Plans for the following planning application:

Application Number: F/2000/1902

Location: Balcombe Lodge, Spring Lane, Swallowfield, Reading.

Proposal: Proposed two storey rear extension to dwelling.

Applicant: Mr P Thompson C/O Peter H Watkins.

Case Officer: Emy Circuit

The new plans show the following: Parking layout showing 8 spaces in addition to the garage.

Comments are required by 10/08/2000.

Should you have any queries regarding this application please contact the case officer Emy Circuit on (0118) 974 6479.

(RING ONE)

REVISED PLANS | ADDITIONAL PLANS | MINOR AMENDMENTS | ADDITIONAL / REVISED PLANS TO COMPLY WITH CONDITIONS

App No. F/2000/1902 (Planaps) / (Ludhouse) Date Rec. 28 July 2000

Location: Balcombe Lodge, Spring Lane

Parish Swallowfield

Applicant: Mr P Thompson

Description of attached plans: parking layout showing 8 spaces in addition to the garage

Drawing No's: ✓

CONSULTEES

, Part I Reg., Parish Council,

ATTN EMMA CIRCUIT

I THINK YOU WILL AGREE THAT THIS IS ENOUGH PARKING & I WOULD OF THOUGHT IT WAS OBVIOUS TO THE HIGHWAYS THAT THERE WAS ADEQUATE PARKING SPACE! T.H.W.

Drawing No's

ape & Trees) ☐
esign) ☐
ys) ✓
g Control) ☐
on ☐

s will be sent to all consultees drawing No's are specified in e.

NEIGHBOURS:

Date for Responses 10 days

FURTHER ACTION

Re-advertise App. Y / (N) (Delete as required)

Redate Application Y / (N) From

New Site Notice Y / (N)

New Description

CASE OFFICER EJC

Consultations Sent by Admin. on 31.07.00

Yellow - Part One Copy
Green - Officer's Copy

HIGHWAYS CONSULTATION SHEET

Received 26/7 on answerphone.

From: Emy Circuit **Date:** 11 July 2000

Application Number: F/2000/1902

Proposal: Proposed two storey rear extension to dwelling.

Parish: SWALLOWFIELD PARISH

Site Address:
Balcombe Lodge, Spring Lane, Swallowfield, Reading.

Applicant:
Mr P Thompson C/O Peter H Watkins.

Your observations are required in respect of this application within **7 days** of the above date.

✓ below as applicable;

1) ☐ ~~Recommend~~ refusal for the reason(s) **stated below**;
2) ☐ ~~Recommend approval but with condition(s) & reason(s)~~ **stated below**;
3) ☐ ~~Recommend approval with~~ **no** condition(s) or reason(s).

Comments

Please could highways have an additional plan showing 2 extra parking spaces within the curtilage of the property

Signed: _____ **Print name:** Stephanie Knowles

24/07/00

ADDRESS BALCOMBE LODGE ✓ PARISH SWALLOCK.

PLOT No. SPRING LANE ORD. SHEET No.

BUILDER

Plan No. 12007	Applicant	Description of Development	Date of Decision	Decision
14852	MR. A DANKEY	HOUSE & GARAGE	12.2.81	C/A
– 15996	"	"	7.8.81	C/A
33259	"	2/SI, 1ST FLOOR, S/KI. EXT.	2.6.89	REL
– 34222	"	1ST FLOOR EXT.	28.9.89	C/A
– 35124			7.2.90	C/A
BRA8419	"	BLDG. & ALTS.	31.1.90	APP
43729	"	RETENTION OF DWELLING	25.1.95	C/A
		WITHOUT COMPLIANCE		
		CONDS. 4 & 6 ON 15996		

DATE OF COMPLETION

MINISTRY DECISION 12007 - APPEAL GRANTED - 6.7.80

SPECIAL ORDERS

DRAINAGE

091074

Environmental Services

For office use only.
Application number:

04 JUL 2006 1902

Householder planning application form

Please answer all questions in CAPITAL letters.
If any question does not apply to you, put N/A in the space.
Please send six copies of the filled in form and your plans to the address on the front of the folder.
We provide guidance notes to help you fill in the form. If you have any questions, please call Planning Support on 0118 974 6428 or 0118 974 6429.

1	Your name	MR. P. THOMPSON
	Address and postcode	BALCOMBE LODGE SPRING LANE SWALLOWFIELD RG7 1SH
	Phone number	9887909
2	Agent's Name	PETER H. WATKINS
	Address and postcode	48 BROOMFIELD ROAD TILEHURST RG30 6AL
	Phone number	9423696
3	Site We need you to send in six copies of the 1:2500 scale location plan and six copies of the 1:500 scale block plan, with the site outlined in red. You can buy these maps from the Environmental Services reception or order them by phoning 0118 974 6485.	BALCOMBE LODGE
4	Give brief details of the proposal for example, two storey side extension. About the application	TWO-STOREY REAR EXTN
5	Are there any trees on the site? If Yes, please show their positions, spread and species of the trees on the plans. Say which trees you plan to cut down.	Yes ☐ No ☑
6	Please list the external materials you will use for example, red brick to match any existing bricks and dark stained timber.	WHITE RENDER, BRICK & CLAY TILES TO MATCH
7	Will the proposal change the pedestrian or vehicle access to the site? Please show details of the existing access and any proposed changes on the plans.	Yes ☐ No ☑
8	Will the car parking provision at the site be changed? If Yes, please show details of any changes on the plans.	Yes ☐ No ☑

3544 Crystal Mark
Clarity approved by Plain English Campaign

Please turn over

9	How many bedrooms does the property have?	Existing: 4	Proposed: 6
10	Does a public right of way touch the site? If yes, please show the route and any proposed alternative on the plans.	Yes ☐	No ☑
11	Checklist. Please make sure that you enclose the following.		
	a Six copies of this form signed and dated.	✓	
	b The fee (We have attached a current scale of fees). If you do not have to pay a fee, please say why below.	£95.00	
	c Six copies of each set of plans and drawings listed below.	✓	
	• 1:2500 scale location plan with the site outlined in red.	✓	
	• 1:500 scale site layout plan.	✓	
	• 1:100 or 1:200 scale floor plans and elevations.	✓	

12 Certificate of ownership (Section 66 Town & Country Planning Act 1990)
Please delete either certificate A or certificate B. If neither apply, you must fill in a full certificate which you can get from Environmental Services.

(Owner means a person with a freehold interest, or someone who is a leasehold tenant with at least seven years left on their agreement)

Certificate A

I certify that

- At the beginning of the period of 21 days ending with the date of the application nobody, except the applicant, owned any part of the land which the application relates to.
- None of the land forms part of an agricultural holding.

Certificate B

I certify that

- I or the applicant has given the necessary notice to everyone else who (at the beginning of the period of 21 days ending with the date of the application) owned any part of the land which the application relates to as listed below.

Owner's name	Address at which the notice was served	Date on which the notice was served

None of the land forms part of an agricultural holding.

Your signature: [signature]

on behalf of M.L. THOMPSON

Date 30-6-2000

Please tick this box if you or your husband, wife or partner are employed by Wokingham District Council ☐

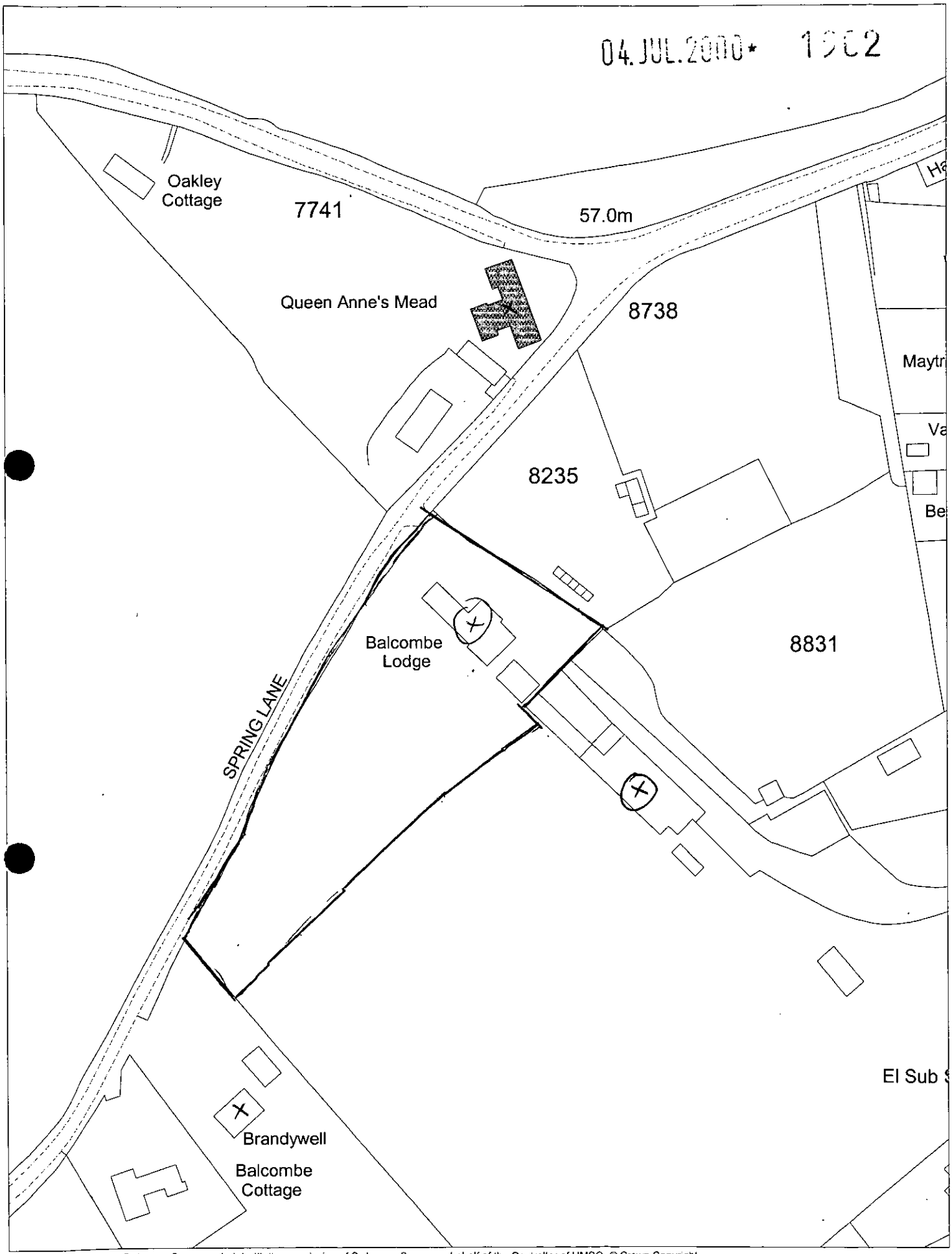

This map is based upon Ordnance Survey material with the permission of Ordnance Survey on behalf of the Controller of HMSO. © Crown Copyright.
Unauthorised reproduction infringes Crown Copyright and may lead to prosecution or civil proceedings.Wokingham District Council Licence LA086134

Development Control Section, Environmental Services, Wokingham District Council.

6 July 2000

Scale: 1 : 1250

N W E S

ADDITIONAL PLAN

1902

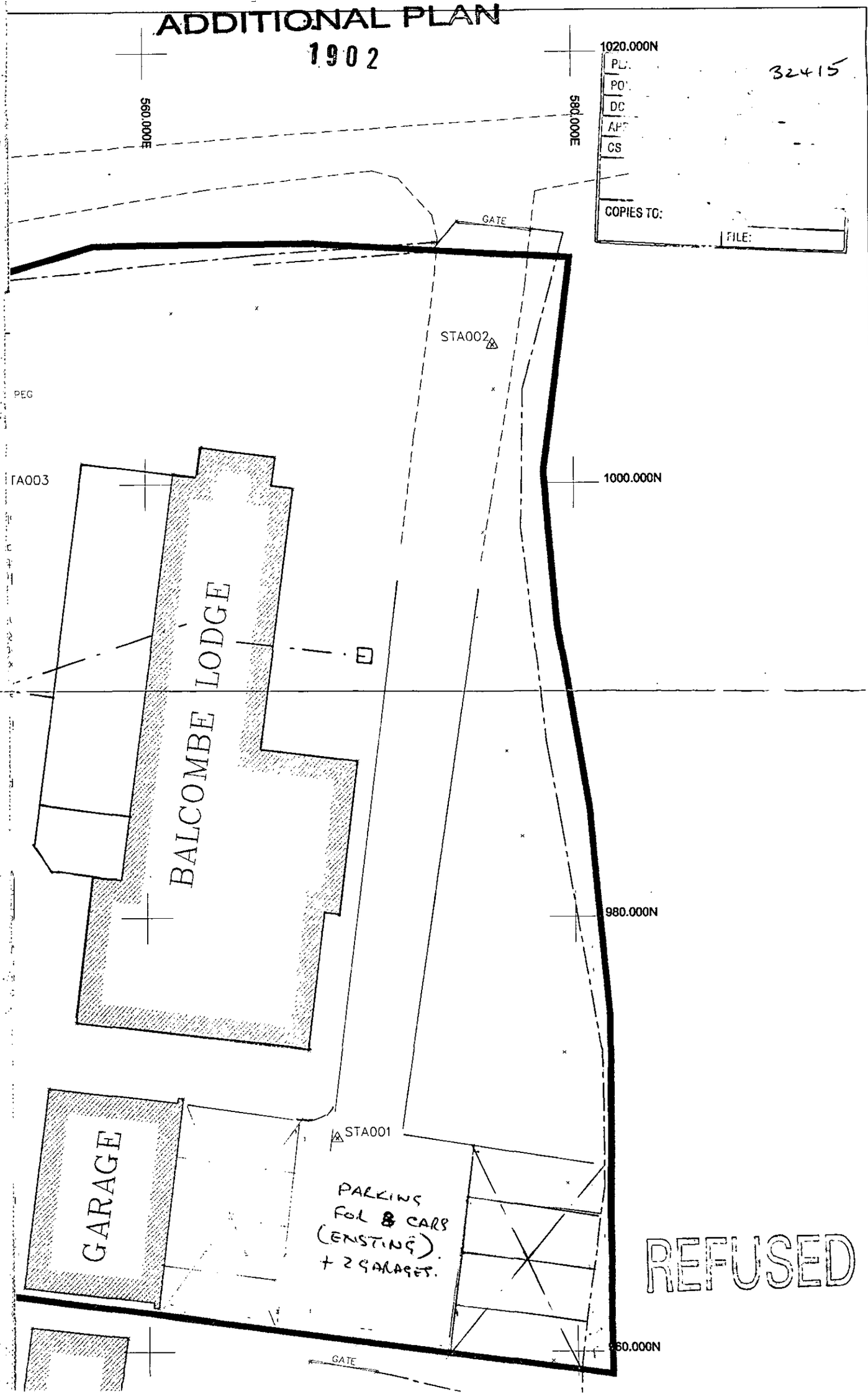

REFUSED