APPLICATION NO:
F/2002/6253

LOCATION:
8 Kingfisher Drive, Woodley Reading.

APPLICANT:
Mr/Mrs M Luscombe

PROPOSAL:
Proposed erection of replacement garage

EARLIEST DATE FOR DECISION: **04/05/2002**
28 day expiry. 8/5/02
APPLICATION WILL HAVE EXPIRED ON:
23/05/2002

CASE OFFICER: **Francis Leo**

APPROVED

203
DO

WOKINGHAM DISTRICT COUNCIL

TOWN AND COUNTRY PLANNING ACTS

Notification of Approval of Permission

Mr & Mrs M Luscombe
8 Kingfisher Drive
Woodley
Reading
Berks
RG5 3LG

Application Number: F/2002/6253

Parish: **WOODLEY**

Location: **8, Kingfisher Drive, Woodley, Reading.**

Proposal: **Proposed erection of replacement garage**

The Wokingham District Council in pursuance of their powers under the above Acts and Regulations hereby **Approve Permission** for carrying out the above development in accordance with the application and the accompanying plans submitted to the Council subject to compliance with the following conditions, the reasons for which are specified hereunder.

Condition
1. The development hereby permitted shall be begun before the expiration of five years from the date of this permission.

Condition
2. All new works and works of making good to the retained fabric shall be finished to match in size, colour, texture and profile those of the existing building.

Condition
3. The proposed garage shall be located 2.2 metres away from the back edge of the pavement within the rear garden.

Condition
4. Notwithstanding the provisions of the Town and Country Planning (General Permitted Development) Order 1995 (or any Order revoking and re-enacting that Order with or without modification) the garage accommodation on the site shall be kept available for the parking of vehicles ancillary to the residential use of the site at all times. It shall not be used for any business nor as habitable space.

Reason
1. In pursuance of Section 91(1) of the Town and Country Planning Act 1990.

Reason
2. To ensure that the external appearance of the building is satisfactory.

Reason
3. In the interest of public safety.

Reason
4. To ensure that adequate parking space is available on the site, and reduce the likelihood of roadside parking.

Informative
1. You are advised, in compliance with The Town and Country Planning (General Development Procedure) (England) (Amendment) Order 2000, that the following policies and/or proposals in the development plan are relevant to this decision:

Berkshire Structure Plan Policy EN1.
Loddon Area Local Plan Policies LBE1 and LBE2.
Deposit Draft Wokingham District Local Plan Policies WOS3 and WBE1.

T. G. Watson

Trevor Watson
Development Control Manager
Date: 05/06/2002

Notice checked by: _____

If this notice grants permission to proceed with the proposal the applicant is reminded that it relates to planning permission only and does not constitute approval under any other legislation including Building Regulations.

WORK SHEET FOR : Francis Leo

Application Number : F/2002/6253

Applicant : Mr/Mrs M Luscombe .

Location : 8, Kingfisher Drive, Woodley, Reading.
Proposal : Proposed erection of replacement garage
taken down

Site Notice Displayed ? :	YES	NO	DATE
	✓		~~2005~~ 7/5

Date of Neighbour Notifications : .....

Date of Site Visit : 24/5/02

Date Registered : 28/03/2002

Earliest Date for Decision : 04/05/2002

Latest Consultation Date/Site Notice Expiry Date : 04/05/2002

This application <u>will have expired on</u>: <u>23/05/2002.</u> You need to make a decision 1 day prior to this date for this application to count as determined in less than 8 weeks.

Consultation Responses :

Woodley Parish : no comment.

Highway ; approve with conditions

Planning Issues : I'd sett.

LBE1, LBE2

WDS3, WBE1.

ENV1.

Application Number: F/2002/6253 **Officer : Francis Leo**
8 Kingfisher Drive, Woodley, Reading

Appraisal :

Development
Proposed erection of replacement garage.

The proposal at no 8 Kingfisher Drive is to demolish the existing garage and build a new timber shed 6.1m deep x 9.19m wide ie to the full width of the garden, to use part of the space as a double garage with up and over doors and the remainder as a store room. The shed would be located approximately 2.2m set-back from the back edge of pavement. In order to explain the proposal more clearly the applicant has submitted a leaflet, showing a sample garage from a garage brochure titled Warwick Garages. The brochure shows a garage with two garage doors, a window and door to the rest of the shed. Applicants proposal would omit the shed door and the window.

The site is a semi-detached property located in the identified settlement of Woodley within the Loddon Area Local Plan and Wokingham District Local Plan.

Impact upon neighbouring properties
Property nos 2-22 to Kingfisher Drive and 5-31 Fairwater Drive share a service road located at the rear of the respective properties. The front entrances of these properties can only be reached by a pedestrian path. The garages are located at the end of the garden set-back some 2-3m from back edge of pavement. Most of the garages appear to have up and over doors. The set-back space allows the opening of the up and over doors without interfering with passing pedestrians.

The proposal would have no adverse impact upon the neighbouring properties because no 10, adjoining property to the south, has a garage alongside to the same depth as the proposal and the garage at no 6 is along the opposite boundary alongside the garage at no 4 to the north of application site.

Impact upon the character of the area
The picture of the garage as shown on the brochure is reasonably pleasing in appearance and would be an improvement on the existing garages fronting the service road. Further this is only a service road and would not affect the front of these properties. In view of this it is felt there would be no adverse impact upon the character of the area.

Highway section has requested roller shutter doors only to be provided. Applicant considers this to be unnecessary because there would be a space of 2.2m from the back edge of pavement to the garage and hence the doors would open only within applicants site without endangering passing pedestrian. In view of this its is felt roller shutter door are not considered necessary.

Recommendation : approval ☑ **Refusal** ☐

Application Number F/2002/6253
Conditions/Reasons for Refusal

No	Std Con	Std Reas	Non Std Conditions / Reasons for Refusal
1	C001	R001	
2	C014	R014	
3	-	-	~~The~~ The proposed garages shall be located 2.2m away from the back edge of pavement within the rear garden.
			Reason: In the interest of public safety.
4	C049	R049.	

Informative for approvals	
N16	
LODDON AREA LOCAL PLAN POLICIES:	LBE1. LBE2
~~SOUTH-EAST AREA LOCAL PLAN POLICIES:~~	
WOKINGHAM DISTRICT LOCAL PLAN POLICIES:	WOS3 WBE1
~~GREEN BELT LOCAL PLAN POLICIES:~~	
BERKSHIRE STRUCTURE PLAN POLICIES:	EN1
~~MINERALS LOCAL PLAN POLICIES:~~	

RECOMMENDATION AND CONDITIONS/REASONS AGREED: RD. [signature]
(Development Control Manager)

Date: 5.6.02.

RECORD OF SITE VISIT

SITE ADDRESS: 8 Kingfisher Drive
Woodley Reading.

APPLICATION NUMBER: F/2002/6253

OFFICER: Francis Leo

DATE OF SITE VISIT: 24/5/02

1 SITE/STATUTORY NOTICE DISPLAYED ? Yes

2. DESCRIPTION OF SURROUNDINGS Rear of properties Service Rd

3. DESCRIPTION OF SITE/BUILDING 2 Storey. Semi-detached
long garden, garage at the rear.

4. RELATIONSHIP TO ADJOINING PROPERTIES Next door No 6 has
a garage along side garage of No 8
No 10 has garage at the rear at the top end

5. SITE CONSTRAINTS

TREES —

ACCESS/PARKING At the rear

LEVELS

BOUNDARY TREATMENT 1.8m high wall at the rear.

OTHERS Nothing bet 8 and 10.
1.8m bet 8 and 6.

FROM: Francis Leo

DATE: 10 April 2002

DELEGATED

WOODLEY TOWN CONSULTATION SHEET

Application Number: F/2002/6253

Proposal: Proposed erection of replacement garage.

Site Address: 8, Kingfisher Drive, Woodley, Reading.

Applicant: Mr/Mrs M Luscombe .

Your observations are required in respect of this application **by 04/05/2002** .

Members had no comment to make on this application.

PLANNING SERVICES	HPT
POL	TLS
DC	ENF
APP	
CS	

07 MAY 2002

COPIES TO

SIGNED: _____ DATE: 2.5.02.

Clerk To Woodley Parish/Town Council.

PLANNING SERVICES	HP 55348
POL	TLS
DC FL	ENF
APP	
CS	
16 APR 2002	
COPIES TO	ACK
	FILE

Kingfisher Drive
Woodley
Reading
Berks
RG5 3DG

Dear mr Leo,

REF NO:- F/2002/6253

With reference to your letter of 10 April 2002, I am writing to confirm that no part of the development encroaches onto, over or under neighbouring property.

Yours sincerely,

D Luscombe (mrs)

HIGHWAYS CONSULTATION SHEET

From: Francis Leo **Date:** 10 April 2002

Application Number: F/2002/6253

Proposal: Proposed erection of replacement garage

Parish: WOODLEY TOWN

Site Address:
8, Kingfisher Drive, Woodley, Reading.

Applicant:
Mr/Mrs M Luscombe .

Your observations are required in respect of this application within **7 days** of the above date.

✓ below as applicable;

1) ☐ Recommend refusal for the reason(s) **stated below**;
2) ☑ Recommend approval but with condition(s) & reason(s) **stated below**;
3) ☐ Recommend approval with **no** condition(s) or reason(s).

1/ C049, R049

2, Only garage doors of roller shutter type may be fitted.

Signed: _____ **Print name:** Adam - 12/4/02 .

Application Number : F/2002/6253	Map No : 46
Case Officer : ~~PE~~ FL	Site Area : 0.03
Valid Date : 28/03/02	Received Date: 28/03/2002

Level : Delegated Application

Description : Proposed erection of replacement garage

Location : 8, Kingfisher Drive, Woodley, Reading.

Parish : WY Ward : SOU

Applicant : Mr/Mrs M Luscombe .

Fee Required: £95 Fee Received: £95 (4)

Additional: ..... or Refund: .....

Enforcement Section to be notified ☐ (tick if required)

Additional information required for validation;

REASON	NOTES	DATE REQ	DATE RECD
LOCATION PLANS			
BLOCK PLANS			
FORMS UNSIGNED			
S.66 MISSING/INCORRECT/ UNSIGNED			
ELEVATION PLANS			
FLOOR PLANS	~~No scale~~.		
NO SCALE OR SCALE IS IMPERIAL			
ENCROACHMENT LETTER REQUIRED	check for encroachment ✓	✓ 10/04	
OTHER			

Is the site in a Conservation Area: ☐ Yes ☐ No If "Yes" which one _____

Is the site a Listed Building: ☐ Yes ☐ No

Is a Statutory Advertisement required: ☐ Yes ☐ No

INTERNAL CONSULTATIONS

Building Control

Heritage (Harold Sanders)

Landscape

Trees

Environmental Health

Housing

Leisure & Cultural Services

Public Rights of Way Officer

Property

Policy & Plans

Joint Strategic Planning Unit

Archaeological Officer (BABTIE)

Education

Social Services

Highways

EXTERNAL CONSULTATIONS

Adjacent DPA : _____

Adjacent Parish : _____

SEB

British Gas

Oil pipeline

Transco

Environment Agency

Railtrack

Police Arch Officer

HERITAGE BODIES

Victorian Society
The Georgian Group
Ancient Monuments Society
Council for British Arch
RCHME
NRPB (Telecommunications)
Sport England
Society for Proct' of Ancient Bldgs
English Heritage

NEIGHBOURS

S/N + see map

OTHERS

No pre-apps

**********FILE COPY**********

Tel: 0118 974 6502

Date: 10 April 2002

My ref: F/2002/6253

WOKINGHAM UNITARY
Aiming for Excellence

Environmental Services Department
Planning Services
P.O. Box 157
Shute End, Wokingham
Berkshire RG40 1WR
Tel: (0118) 974 6000
Fax: (0118) 974 6484
Minicom No: (0118) 974 6991
DX: 33506 – Wokingham

Councillor K Gilder
360 Kingfisher Drive
Woodley
RG5 3LH

Dear Councillor

Application Number: F/2002/6253
8, Kingfisher Drive, Woodley, Reading.
Proposed erection of replacement garage

I write to let you know that the above mentioned application has been received.

At this stage a recommendation has not yet been made. This form should only be returned if it is likely that you might wish for the application to be listed for consideration by the Development Control Committee. This form must be received no later than 28 days from the date of this letter.

If you have concerns about the proposals it may be possible for these to be addressed during the consideration of the application. In these circumstances it would be helpful if you could discuss these with the case officer **Francis Leo** on **0118 974 6502** in the first instance.

Yours sincerely
Trevor Watson
Development Control Manager

LISTING FORM

Case officer: **Francis Leo** Application Number: **F/2002/6253**
8, Kingfisher Drive, Woodley, Reading.
Proposed erection of replacement garage
I wish this application to be listed should the officers recommendation be for: GRANT/REFUSAL and my reasons are:

_____

_____

Should the officers recommendation be in accordance with my views I am happy for the application to be determined under delegated powers. YES/NO

Signed: _____ Date: _____

Councillor K Gilder

**********FILE COPY**********

**********FILE COPY**********

Tel: 0118 974 6502

Date: 10 April 2002

My ref: F/2002/6253

WOKINGHAM UNITARY
Aiming for Excellence

Councillor C Lawley
26 Farriers Close
Woodley
RG5 3DD

Environmental Services Department
Planning Services
P.O. Box 157
Shute End, Wokingham
Berkshire RG40 1WR
Tel: (0118) 974 6000
Fax: (0118) 974 6484
Minicom No: (0118) 974 6991
DX: 33506 – Wokingham

Dear Councillor

Application Number: F/2002/6253
8, Kingfisher Drive, Woodley, Reading.
Proposed erection of replacement garage

I write to let you know that the above mentioned application has been received.

At this stage a recommendation has not yet been made. This form should only be returned if it is likely that you might wish for the application to be listed for consideration by the Development Control Committee. This form must be received no later than 28 days from the date of this letter.

If you have concerns about the proposals it may be possible for these to be addressed during the consideration of the application. In these circumstances it would be helpful if you could discuss these with the case officer **Francis Leo** on **0118 974 6502** in the first instance.

Yours sincerely
Trevor Watson
Development Control Manager

LISTING FORM
Case officer: **Francis Leo** Application Number: **F/2002/6253**
8, Kingfisher Drive, Woodley, Reading.
Proposed erection of replacement garage
I wish this application to be listed should the officers recommendation be for: GRANT/REFUSAL and my reasons are:

_____

_____

Should the officers recommendation be in accordance with my views I am happy for the application to be determined under delegated powers. YES/NO

Signed: _____ Date: _____

Councillor C Lawley

**********FILE COPY**********

**********FILE COPY**********

Tel: 0118 974 6502

Date: 10 April 2002

My ref: F/2002/6253

WOKINGHAM UNITARY
Aiming for Excellence

Councillor E Rowland
155 Fairwater Drive
Woodley
RG5 3JQ

Environmental Services Department
Planning Services
P.O. Box 157
Shute End, Wokingham
Berkshire RG40 1WR
Tel: (0118) 974 6000
Fax: (0118) 974 6484
Minicom No: (0118) 974 6991
DX: 33506 – Wokingham

Dear Councillor

Application Number: F/2002/6253
8, Kingfisher Drive, Woodley, Reading.
Proposed erection of replacement garage

I write to let you know that the above mentioned application has been received.

At this stage a recommendation has not yet been made. This form should only be returned if it is likely that you might wish for the application to be listed for consideration by the Development Control Committee. This form must be received no later than 28 days from the date of this letter.

If you have concerns about the proposals it may be possible for these to be addressed during the consideration of the application. In these circumstances it would be helpful if you could discuss these with the case officer **Francis Leo** on **0118 974 6502** in the first instance.

Yours sincerely
Trevor Watson
Development Control Manager

LISTING FORM
Case officer: **Francis Leo** Application Number: **F/2002/6253**
8, Kingfisher Drive, Woodley, Reading.
Proposed erection of replacement garage
I wish this application to be listed should the officers recommendation be for: GRANT/REFUSAL and my reasons are:

_____

_____

Should the officers recommendation be in accordance with my views I am happy for the application to be determined under delegated powers. YES/NO

Signed: _____ Date: _____

Councillor E Rowland

**********FILE COPY**********

Received by Wokingham District Council

Application No: F/2002/6253

Proposal:
Proposed erection of replacement garage

Location:
8, Kingfisher Drive, Woodley, Reading.

The application is available for inspection at Wokingham District Council's offices during the following times:

PLANNING DEPARTMENT, SHUTE END, WOKINGHAM TEL (0118) 974 6428
8.30 - 5.00 Monday - Thursday & 8.30 - 4.00 Friday

WOODLEY LIBRARY HEADLEY ROAD WOODLEY 9.30am - 7.00pm Mon, Thurs & Fri. 9.30am - 5.00pm Tues, 9.30am - 1.00pm Saturday and 1.00pm - 4.00pm Sunday. Library closed all day Wednesday. If you intend to view this application at Woodley Library please allow 4 days from the date of this letter for delivery of plans and remember to quote application number F/2002/6253 to enable the library staff to locate the correct information.

Comments should be sent in writing QUOTING THE APPLICATION NUMBER to the Case Officer Francis Leo P.O. Box 157 Council Offices, Shute End, Wokingham Berkshire, RG40 1WR to arrive on or before 04/05/2002. Written comments submitted will become available for public inspection.

In view of the very large number of planning applications and letters of comment received, it will not be possible for an individual reply to be issued to observations made. However any comments will be taken into account when the application is determined and you will be notified of the decision.

Trevor Watson
Development Control Manager

10 April 2002

Organisation_Name	Building_Name	address1	Postcode
		11FAIRWATER DRIVEREADING	RG5 3JG
		17FAIRWATER DRIVEREADING	RG5 3JG
		9FAIRWATER DRIVEREADING	RG5 3JG
		10KINGFISHER DRIVEREADING	RG5 3LG
		6KINGFISHER DRIVEREADING	RG5 3LG
		~~8KINGFISHER DRIVEREADING~~	~~RG5 3LG~~

Neighbour consultation list F/2002/6253

28.MAR2002 * 253 6253

Environmental Services

For office use only.
Application number:

Householder planning application form

Please answer all questions in CAPITAL letters.
If any question does not apply to you, put N/A in the space.
Please send six copies of the filled in form and your plans to the address on the front of the folder.
We provide guidance notes to help you fill in the form. If you have any questions, please call Planning Support on 0118 974 6428 or 0118 974 6429.

1	Your name Address and postcode Phone number	MR. M.J. & MRS D. LUSCOMBE 8 KINGFISHER DRIVE WOODLEY READING BERKS RG5 3EG 0118 9667061
2	Agent's Name Address and postcode Phone number	N/A
3	Site We need you to send in six copies of the 1:2500 scale location plan and six copies of the 1:500 scale block plan, with the site outlined in red. You can buy these maps from the Environmental Services reception or order them by phoning 0118 974 6485.	8 KINGFISHER DRIVE WOODLEY READING BERKS RG5 3EG
4	Give brief details of the proposal for example, two storey side extension About the application	SINGLE STOREY GARAGE TO REPLACE EXISTING GARAGE/SHED/ HARD STANDING AREA
5	Are there any trees on the site? If Yes, please show their positions, spread and species of the trees on the plans. Say which trees you plan to cut down.	Yes ☐ No ☒
6	Please list the external materials you will use for example, red brick to match any existing bricks and dark stained timber.	TANALISED TIMBER 1 COURSE SEMI-ENGINEERING BRICKS
7	Will the proposal change the pedestrian or vehicle access to the site? Please show details of the existing access and any proposed changes on the plans.	Yes ☐ No ☒
8	Will the car parking provision at the site be changed? If Yes, please show details of any changes on the plans.	Yes ☐ No ☒

Crystal Mark
Clarity approved by Plain English Campaign

Please turn over

9	How many bedrooms does the property have?	Existing:	Proposed:
10	Does a public right of way touch the site? If yes, please show the route and any proposed alternative on the plans.	Yes ☐	No ☒
11	Checklist. Please make sure that you enclose the following:		
a	Six copies of this form signed and dated.		
b	The fee (We have attached a current scale of fees). If you do not have to pay a fee, please say why below.		
c	Six copies of each set of plans and drawings listed below.		
	• 1:2500 scale location plan with the site outlined in red.		
	• 1:500 scale site layout plan.		
	• 1:100 or 1:200 scale floor plans and elevations.		

12 Certificate of ownership (Section 66 Town & Country Planning Act 1990)
Please delete either certificate A or certificate B. If neither apply, you must fill in a full certificate which you can get from Environmental Services.

(Owner means a person with a freehold interest, or someone who is a leasehold tenant with at least seven years left on their agreement)

Certificate A

I certify that

- At the beginning of the period of 21 days ending with the date of the application nobody, except the applicant, owned any part of the land which the application relates to.
- None of the land forms part of an agricultural holding.

Certificate B

I certify that

- I or the applicant has given the necessary notice to everyone else who (at the beginning of the period of 21 days ending with the date of the application) owned any part of the land which the application relates to as listed below.

Owner's name	Address at which the notice was served	Date on which the notice was served

None of the land forms part of an agricultural holding.

Your signature: [signature]

on behalf of

Date 28/03/02

Please tick this box if you or your husband, wife or partner are employed by Wokingham District Council ☐

£26,000 000 & 00

ADDRESS 8 KINGFISHER DRIVE PARISH WOODLEY

PLOT No. 63 (Stage 6) ORD. SHEET No. SU.7572 (46)

BUILDER Cooks of Reading Ltd

Plan No.	Applicant	Description of Development	Date of Decision	Decision
O/32/61	J.T. Cook & Son Ltd	Outline	Referred to BCPC. No decision	
O/148/62	" "	"	31.1.63	N/A C/A
83/66	" "	Layout Plan	4.8.66	N/A C/A
PD/538/66	" " 83/66	Refers " "	29.9.66	App. N/A
92/68	Cooks of Reading Ltd	Layout & sewer details	3.10.68	App C/A
13/69	"	Semi/Det House	20.2.69	App. C/A
DD/359/71	Mr P.N. Alderson	Garage	8.7.71	APP N/A

DATE OF COMPLETION

MINISTRY DECISION PDErg Erect of car. Nr Luscombe 10.7.01 (Y)

SPECIAL ORDERS TPO 3/51

DRAINAGE

26 MAR 2002 6253

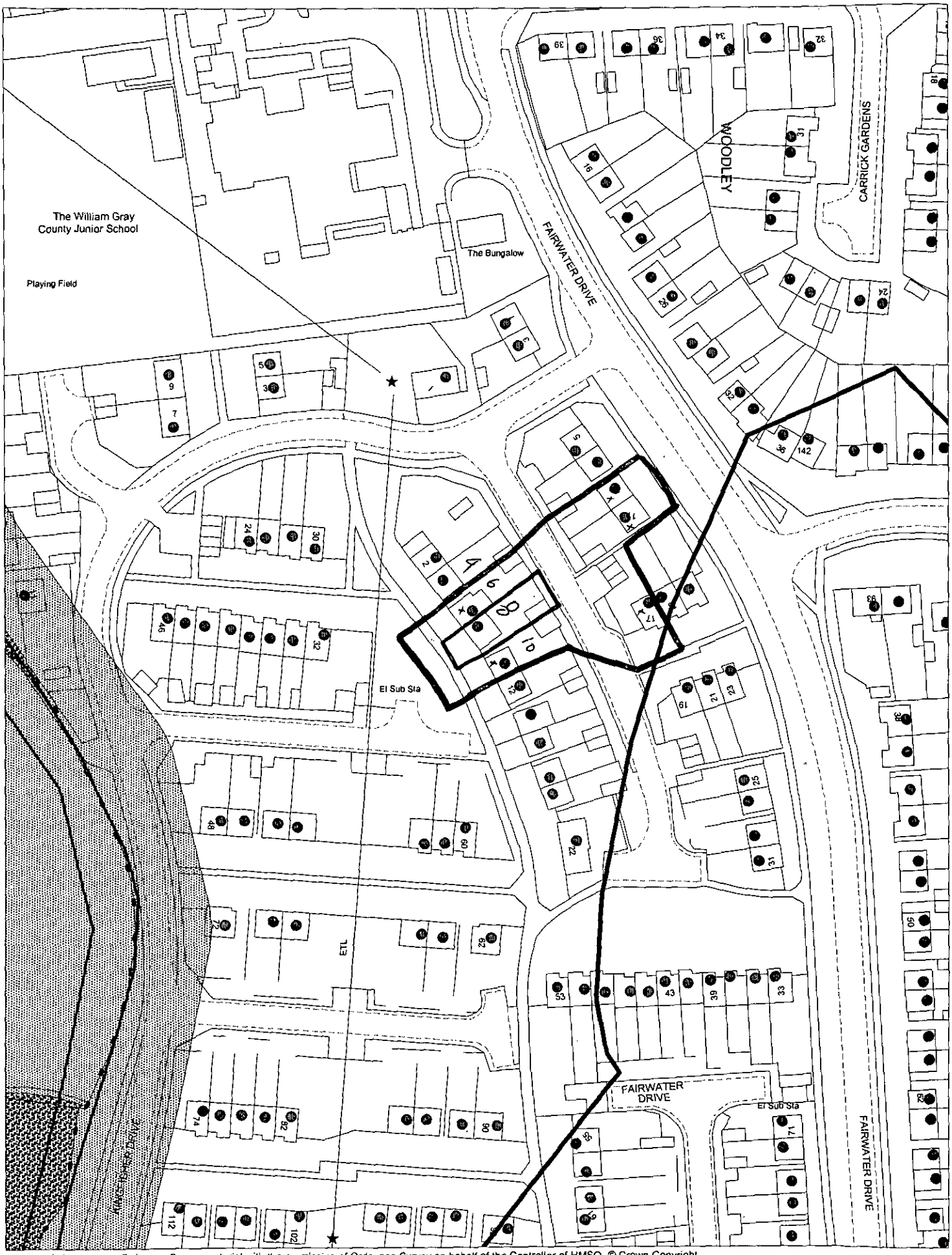

This map is based upon Ordnance Survey material with the permission of Ordnance Survey on behalf of the Controller of HMSO. © Crown Copyright.
Unauthorised reproduction infringes Crown Copyright and may lead to prosecution or civil proceedings.Wokingham District Council Licence LA086134

Development Control Section, Environmental Services, Wokingham District Council.
4 April 2002 Scale: 1 : 1250

N
W E
S

28.MAR2002* 6253

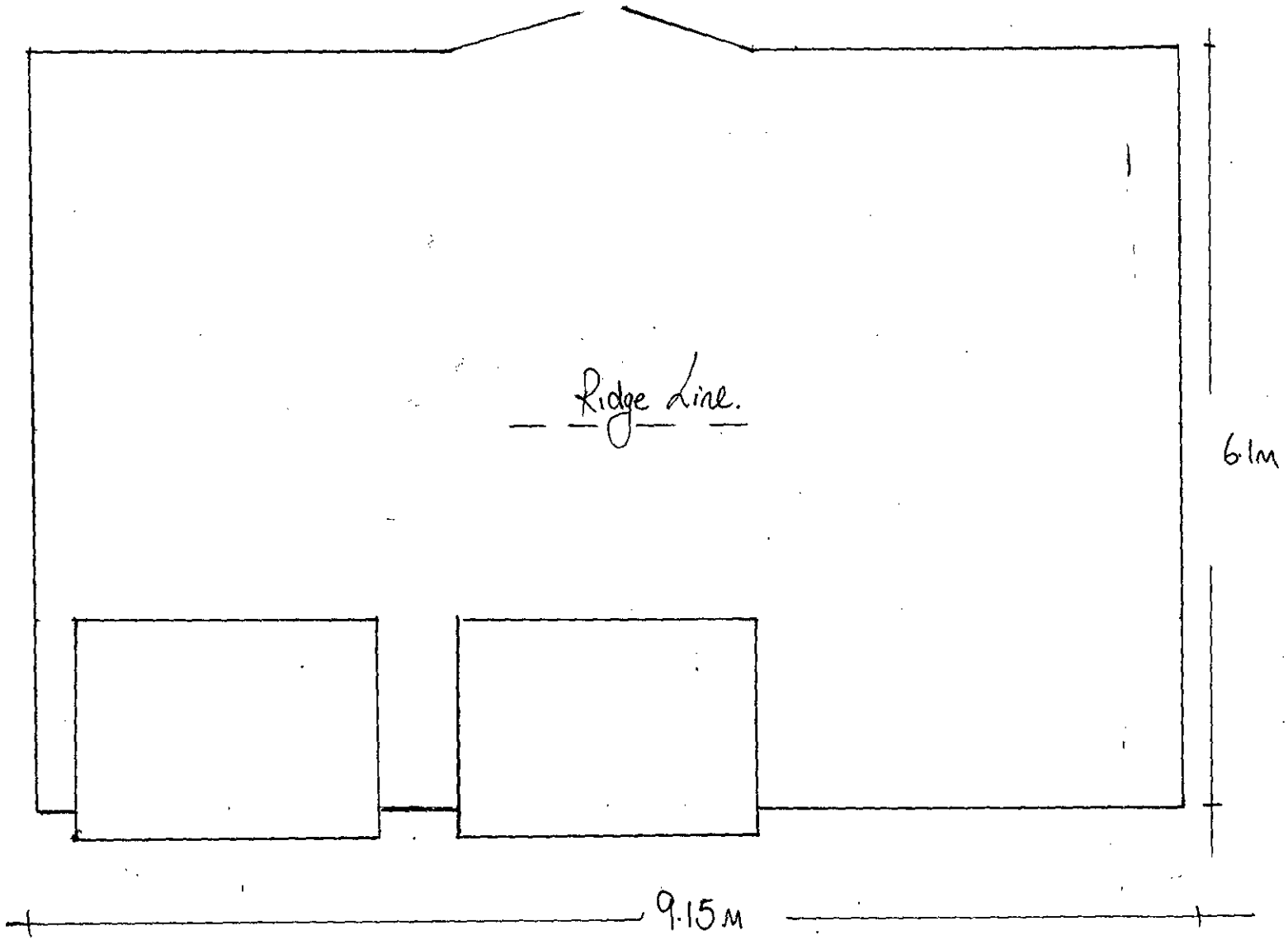

APPROVED

I agree with the above drawing

Signed:.....

Eaves Height of .....

Roofing Felt Colour.....

THIS IS NOT A BASE PLAN

Warwick Buildings

Southam Road, Long Itchington, Nr. Rugby, Warwickshire CV23 8QL

Telephone: 01926 815757
Fax: 01926 815162

Proposed plan for:

MRS LUSCOMBE
8 KINGFISHER DRIVE
WOODLEY
READING
BERKS.
RG5 3LG.

Drawn by: DJW

Date: 19 MARCH 02

Amended date:

Required base for equestrian buildings & garages

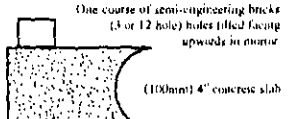

Required base for heavy duty and garden buildings

Good quality paving slab
OR
4" concrete slab (100mm)
&
6" of compacted hardcore (150mm)



26 MAR 2002* 6253

BACK.

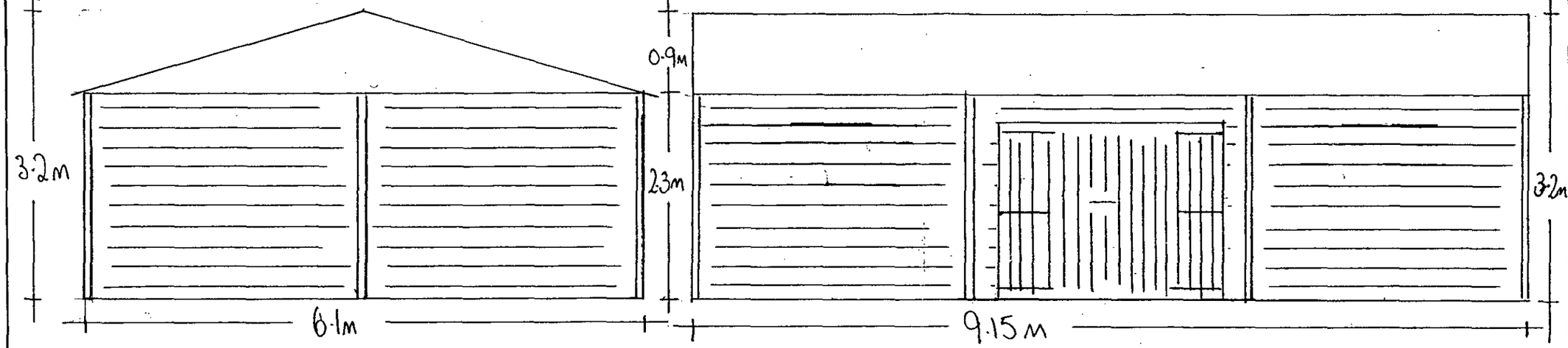

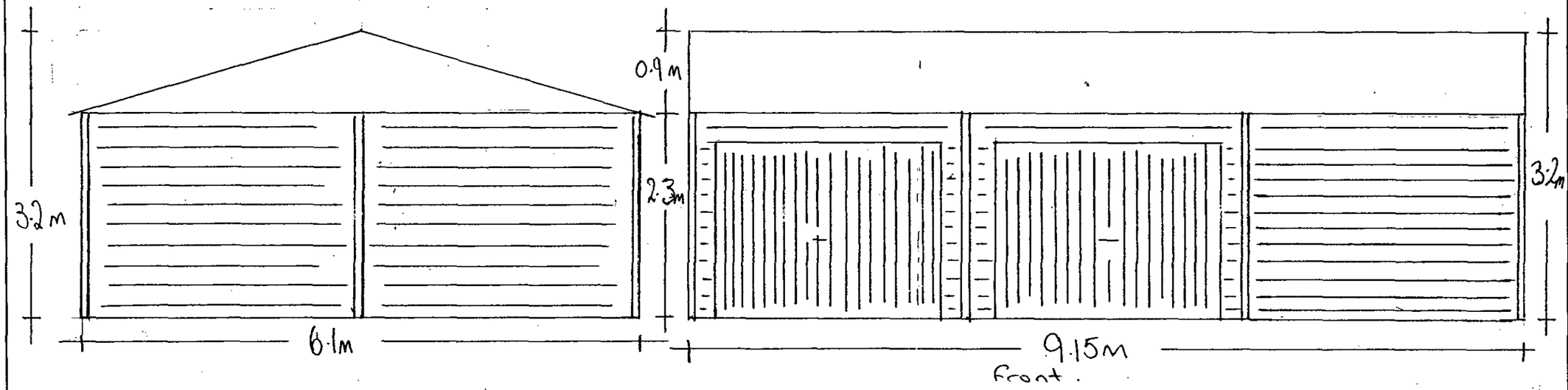

Front.

APPROVED

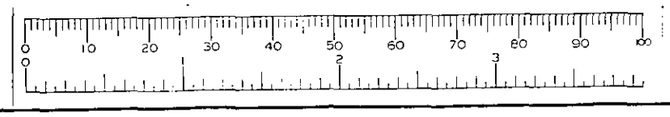

Warwick Buildings

Southam Road, Long Itchington, Nr. Rugby, Warwichshire CV23 8QL

Telephone: 01926 815757
Fax: 01926 815162

Proposed base plan for:

MRS LUSCOMBE
8 KINGFISHER DRIVE
WOODLEY
READING
BERKS
RG5 3LG.

SCALE 1:50

Drawn by: DJW

Date: 19 MARCH 02

Amended date:

Required base for equestrian buildings & garages

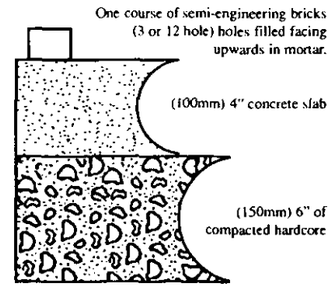

The dimensions shown on this drawing are those of the required brick course. As our buildings are made to an exact size the completed foundations MUST correspond exactly (by steel tape measure) to the measurements on this drawing. If the foundations are incorrect in any way, the expense of alterations and delays in erection etc., are the responsibility of the builder and/or customer.