ASHLEY HOUSE
SUPPORTING PRIMARY CARE

PLANNING SERVICES HPT 8/9/05
POL GC M.S
25 JUL 2005
COPIES TO: ACK: FILE:

18 July 2005

Miss E Circuit
Planning Services
Wokingham District Council
PO Box 157
Shute End
Wokingham
Berks
RG40 1WR

PLANS TO MEET CONDITIONS

--5535

Dear Miss Circuit

Re: Woosehill Health Centre, Wokingham (ref: F/2001/5535)

Thank you for your letter dated 13 April 2005. Further to the outstanding Planning Conditions, we respond as follows.

Condition 3
No boundary fencing is proposed on the site. The site boundaries will be defined by new planting and planting beds as described on enclosed external finishes drawing 0255-1.40 Revision D.

Condition 8
Please find enclosed new details of the proposed covered cycle parking provision. The cycle shelter will accommodate six bicycles and will have a transparent roof.

Condition 10
Further to discussions with your Highways Department it is proposed to form a temporary hollow in the road at the point of contractors vehicles' site access. The hollow will be kept filled with water, so automatically cleaning mud from the tyres of vehicles leaving the site. This solution is an alternative to the jet hose wash, which may not be used regularly. Please see enclosed drawing 0255-1.70 Revision A.

Condition 11
Please find enclosed amended external finishes drawing number 0255-1.40 Revision D showing the soft and hard landscaping proposals for the site, including the number and densities of the new planting. Please note that the proposed new access road is 4.8 metres wide.

We trust that the enclosures are acceptable and the Planning Conditions may now be discharged.

Yours sincerely

Justin Potter

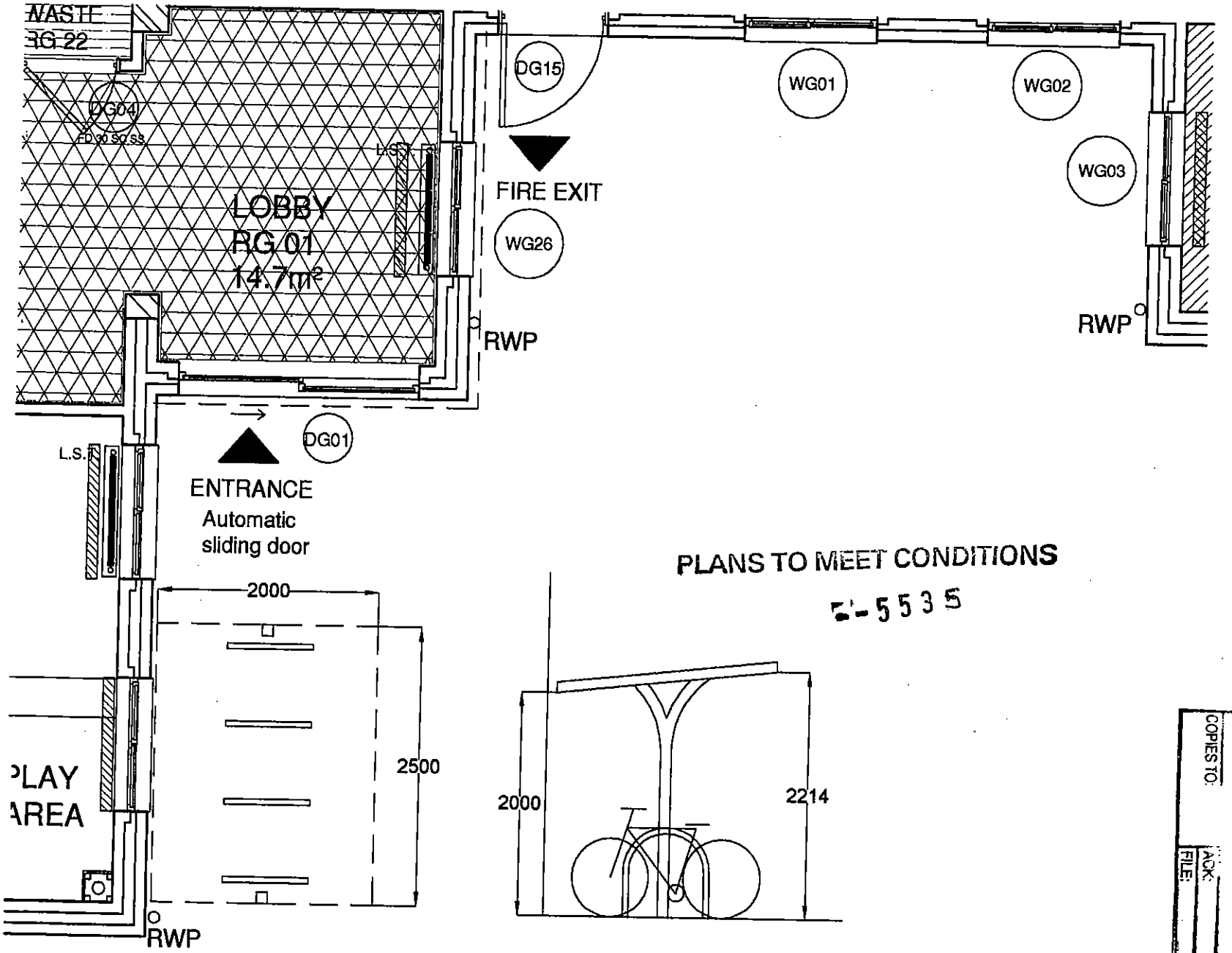

PLANS TO MEET CONDITIONS

5-5535

25 JUL 2005

COPIES TO:

ACK:

FILE:

PLANNING SERVICES DEPT

PROPOSED CYCLE SHELTER

WOKINGHAM

SCALE 1:50

BX/MW/RA/RM

Single Unit Size - Width: 2500 Height: 2000 (to front) 2214 (to rear) Length: 4100

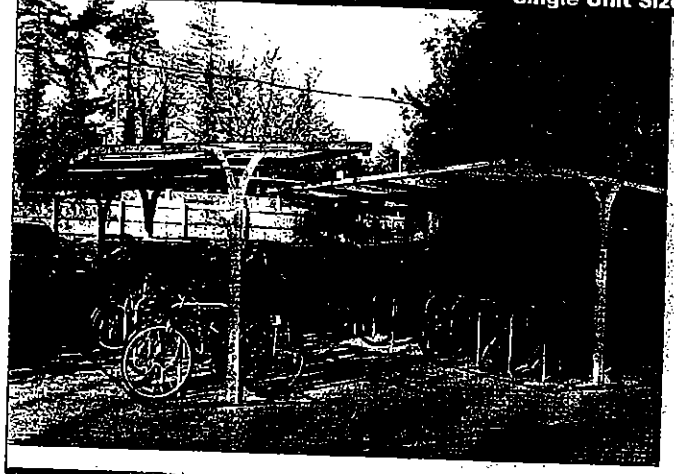



Features: This robust shelter provides an excellent solution to cycle storage. The shelter's design enables cyclists to park and retrieve cycles from the front or rear of shelter. Cycles loaded horizontally between sheffield stands, 800mm centres.

Construction: Easi-fit bolt together cycle shelter. Constructed of square hollow section welded steel framework, with ClearView P.E.T. roof cladding.

Capacity: A standard, single unit houses up to 20 cycles dependent on choice of rack.

Options:

- Choice of racks and stands available.
- Lighting.
- P.E.T. or Colourcoat profile sheet roof cladding.
- Submerged or baseplate fixed.
- Installation service (contact Customer Services Dept.)

Uses

- People or passenger waiting areas
- Smoking shelters

STANDARD UNIT

Single unit Open front unit & back clad with ClearView **P.E.T.** roof panels.	£1720.00	£1895.00*

* Prices shown are for a single unit Polyester Powder Coated in one standard Broxap colour excluding rack.

BX/MW/EXT

Single Unit Size - Width: 2200 Height: 2200 Length: 4000

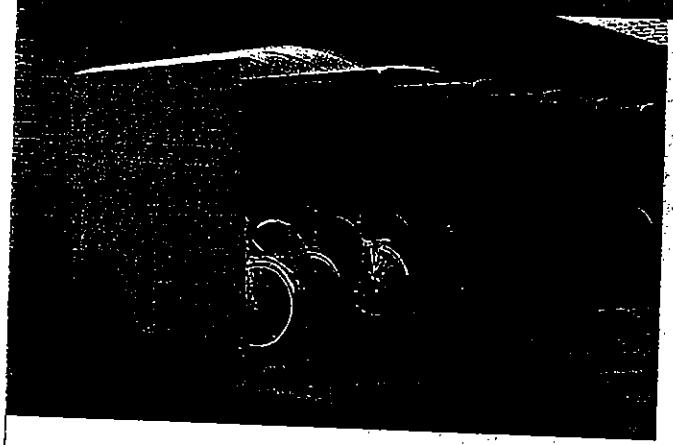

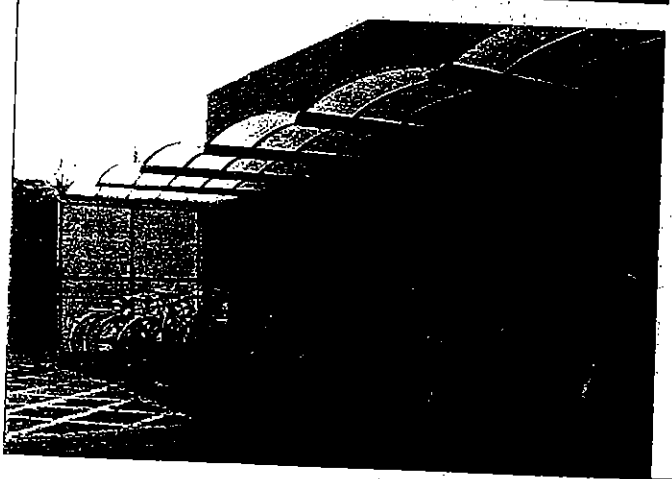

Features

Rounded roof to shed water to the side guttering which is fed to floor level via the rear supports. Clear View PET sheeting giving all round visibility. Cantilever rear supports, with submerged fixing and full height entry.

Construction

Welded frames made from heavy-duty box section assembled with anti-tamper high strength bolts. Hot dipped galvanized to BS EN ISO 1461:1999

Options

- ClearView side & back panels
- Lighting
- Roof can be added to rear
- Installation service (contact Customer Services Dept.)
- Available in additional 2 metre modules

Uses

- Contemporary cycle shelter
- People or passenger waiting areas
- Smoking shelters
- Entrance shelter

STANDARD UNIT

Single unit 4 mtr. long Open front unit clad with ClearView **P.E.T.** roof panels.	£1990.00*	£2160.00*

* Prices shown are for a single unit Polyester Powder Coated in one standard Broxap colour excluding rack.

--5535

PLANS TO MEET CONDITIONS



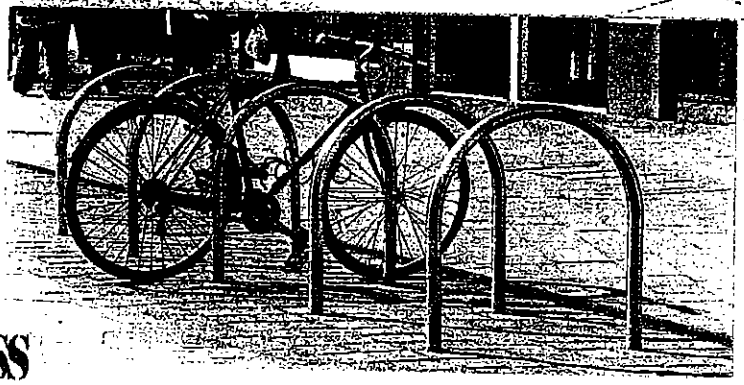

SS

This popular tubular cycle stand allows the bike's frame to be secured by the users own lock.

Available in 50mmø steel, hot dipped galvanized to BS EN 1416:1999, and polyester powder coated.

Also available in Stainless Steel and Duracast polyurethane **£P.O.A.**.

Duracast is an engineering grade polyurethane which is rust and corrosion resistant and virtually maintenance free. As it is a polymer it provides maximum protection against damaging the bikes frame *(very cycle friendly)*.

All versions are available baseplate or submerged fixed.

PLANS TO MEET CONDITIONS

5535

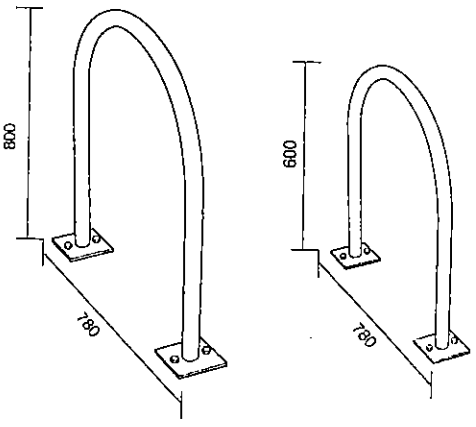

SENIOR SIZE JUNIOR SIZE

No. of stands	Galvanized	Galvanized & Polyester Powder Coated
1 - 10 off	**£38.00**	**£48.00***
11 - 20 off	**£35.00**	**£45.00***
21 +	**£P.O.A.**	**£P.O.A.***

* Prices shown are for a single unit painted Polyester PowderCoated in one standard Broxap colour.