APPLICATION NO:

TL/2000/2606

LOCATION:

Ringway Highway Services Toutley Depot Old Forest Road, Wokingham.

APPLICANT:

BT Cellnet C/O Grantham, Parsons & Nolan Ltd

PROPOSAL:

Proposed upgrading of existing telecommunications site with addition of equipment cabin and extension to compound.

EARLIEST DATE FOR DECISION: **17/11/2000**

APPLICATION WILL HAVE EXPIRED ON:
24/11/2000

28 DAYS

CASE OFFICER: **Emy Circuit**

APPROVED

WOKINGHAM DISTRICT COUNCIL

TOWN AND COUNTRY PLANNING ACTS

APPROVAL OF PRIOR APPROVAL OF TELECOMMUNICATIONS NOTIFICATION

Lee Johnson
Grantham, Parsons and Nolan Ltd
Triumph House
Birmingham Road
Meriden
Nr Coventry
CV5 9AZ

Notification No: TL/2000/2606

Parish: Wokingham

Proposal: Upgrading of existing telecommunications site with addition of equipment cabin and extension to compound

Location: Ringway Highway Services, Toutley Depot, Old Forest Road, Wokingham

The Wokingham District Council in pursuance of their powers under Part 24 of the Town and Country (General Permitted Development) (Amendment) Order 1998 **GRANTS** prior approval for the above stated telecommunications equipment, the reasons/conditions for which are specified hereunder.

Date: 21/11/00

Head of Planning and Transportation

Tel. 0118 974 6445 (Direct Line)
E-mail: Angela.Odell@wokingham.gov.uk
Date. 24 March, 2004
My ref. AO/TL/2000/2606
Your ref. O2/2421/SRE

APT
Blays House
Wick Road
Englefield Green
Egham
TW20 0HJ

Planning Services
P.O. Box 157
Shute End, Wokingham
Berkshire RG40 1WR
Tel: (0118) 974 6000
Fax: (0118) 974 6484
Minicom No: (0118) 977 8909
DX: 33506 – Wokingham

Dear Mr Edwards

APPLICATION TL/2000/2606 – TOUTLEY DEPOT, OLD FOREST ROAD, WOKINGHAM

Thank you for your fax of 17 March. I confirm that the proposed alterations shown on the enclosed drawings are acceptable as a minor amendment to the above permission.

I trust the above is clear, but meanwhile if you wish to discuss the above further please contact me.

Yours sincerely

AO.

MRS A ODELL
Planning Officer

01784487500

A·P·T
A Marconi company

Blays House, Wick Road
Englefield Green, Egham TW20 0HJ

Telephone: 01784 487444
Fax: 01784 487400 / 01784 487500

The Chief Planning Officer
Wokingham District Council
Planning Department
Civic Offices
Shute End
Wokingham
RG40 1BN

My Ref. O2/2421/SRE
Your Ref. TL/2000/2606
Date: 3rd February 2004

Dear Sir / Madam,

O2 (UK) Ltd
2421 – North Wokingham
Notification of Permitted Development

Proposed upgrade of existing O2 (UK) Ltd mast with the addition of an equipment cabin and extension to compound at Ringway Highway Services, Toutley Depot, Forest Road , Wokingham.

I write with regards to the above planning application that was Granted on the 21st November 2000.

My client is now able to locate the proposed additional radio equipment cabinet within the existing compound. An extension to the existing compound is therefore no longer required. Please find enclosed a set of revised drawings (Dwg Nos.P/2421U/001/A, /002/A, /003/A & /004/A) that reflect this change in design. It is my client's opinion that this alteration will provide a less visually intrusive solution. I would therefore be most grateful if this change to the approved scheme could be dealt with as a minor amendment.

Yours faithfully,

Simon Edwards
Project Planner
For and on Behalf of O2 (UK) Ltd
Direct Line: 01784 487314
E-mail: simon.r.edwards@marconi.com

17/03 '04 16:41 FAX 01784487500 APT MARONI 01784487500 003

LOCATION OF SITE

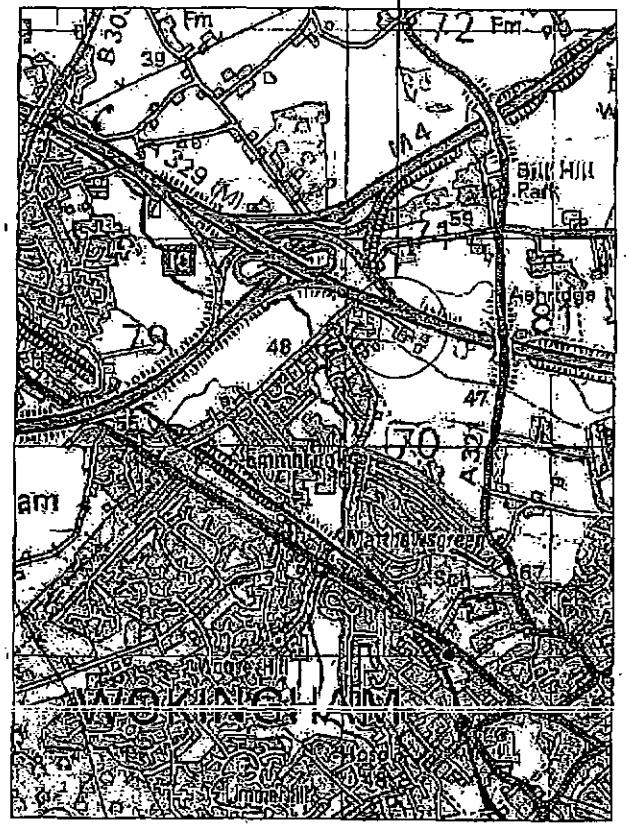

SITE LOCATION PLAN
(SCALE 1:25000)

SITE ACCESS

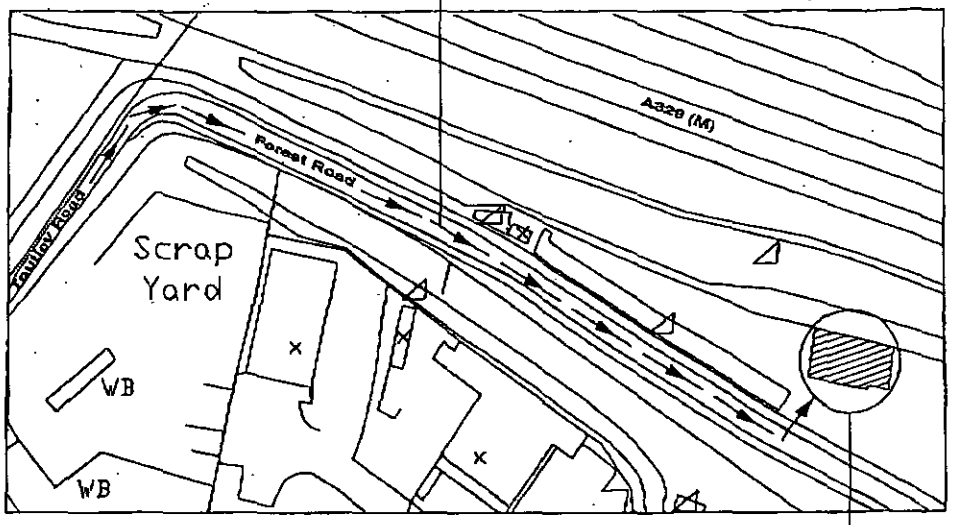

SITE BLOCK PLAN
(SCALE 1:1000)

LOCATION OF SITE

GENERAL NOTES

This drawing is the Copyright of O2(UK) and must not be reissued, loaned or copied without written consent.
Use written dimensions only. Do not scale.

Rev	Date	Description	Drw	Chkd
A	22/09/03	First Issue for Planning	MM	LG

Ordnance Survey

This drawing is based upon Ordnance Survey's 1:1250 map with the permission of the Controller of Her Majesty's Stationery Office. © Crown copyright. Licence Number: 100020449

GallifordTry
Communications
Wolvey, Hinckley
Leicestershire. LE10 3JF
Tel: +44 (0)1455 222777 Fax: +44 (0)1455 222758

O2 (UK)

Project Title:
2421U
North Wokingham

Site Address:
North Wokingham
Toutley Road Depot
Toutley Road
Wokingham, Berkshire
RG41 1XA

Grid Ref:	Ground Height AMSL:
SU. 8023 7058	48 meters

Drawing Title:
Location Plans

Date: 18.09.03	Drawn: M.Manetas
Scale: As Shown	Checked: L.Goodman
Region: M25&South	Approved: L.Goodman

Drawing Number:
P/2421U/001/A

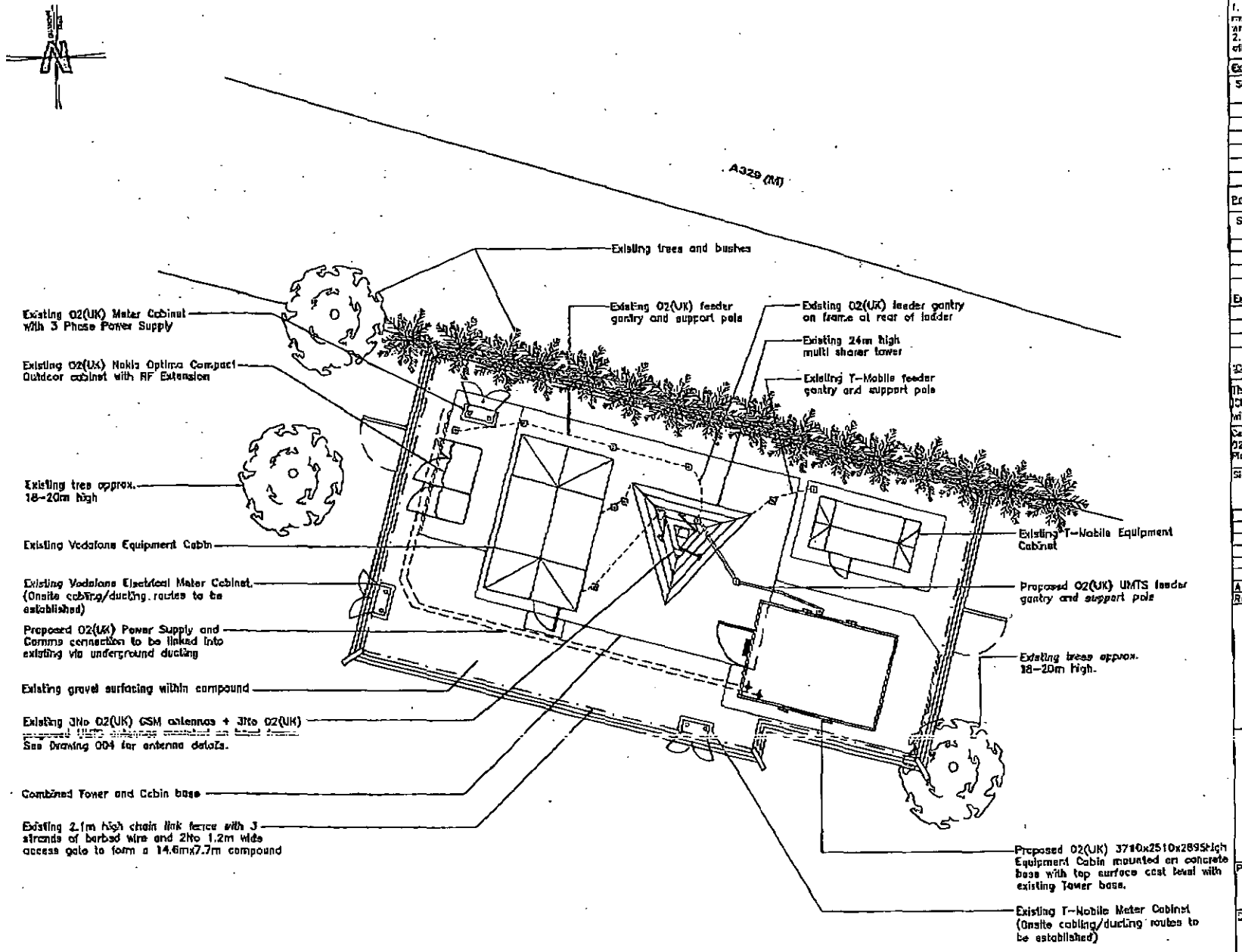

SITE PLAN – 1:100

NOTES

1. This drawing is the Copyright of O2(UK) and must not be reissued, loaned or copied without written consent.
2. Dimensions are in millimetres unless noted otherwise. Do not scale, use written dimensions only

Existing Antenna Schedule

Sector	Type	HGT to c/l	Bearing	Feeder Type	Feeder Length
1	GSM	23.0m	60°	LDF5-50	32m
2	GSM	23.0m	180°	LDF5-50	32m
3	GSM	23.0m	300°	LDF5-50	32m
-	-	-	-	-	-
-	-	-	-	-	-
-	-	-	-	-	-

Proposed Antenna Schedule

Sector	Type	HGT to c/l	Bearing	Feeder Type	Feeder Length
4	65x4IF	23.4m	0°	LDF5-50	32m
5	65x4IF	23.4m	120°	LDF5-50	32m
6	65x4IF	23.4m	240°	LDF5-50	32m

Existing Dish Schedule

No.	Diameter	HGT to c/l	Bearing
1	-	-	-
2	-	-	-

'ICNIRP 'Sign off' statement Box

The proposed installation is compliant with ICNIRP recommendations.(Designed in accordance with O2(UK) Datasheet 064 issue 3.0)

Certified by O2(UK) Radio Planner | Name:

Signature: | Date:

Rev	Date	Description	Drn/Chkd
A	22.09.03	First issue for planning	MN/LG

GallifordTry Communications
Wolvey, Hinckley
Leicestershire. LE10 3JF
Tel: +44 (0)1455 222777 Fax: +44 (0)1455 222758

O2 (UK)

Project Title:
Cell 2421U
North Wokingham

Drawing Title:
General Arrangement

Date: 18.09.03	Drawn: M.Manetos
Scale: As shown	Checked: L.Goodman
Region: M25&South	Approved: L.Goodman

Drawing Number:
P/2421U/002/A

17/03 '04 16:41 FAX 01784487500 APT MARONI 004

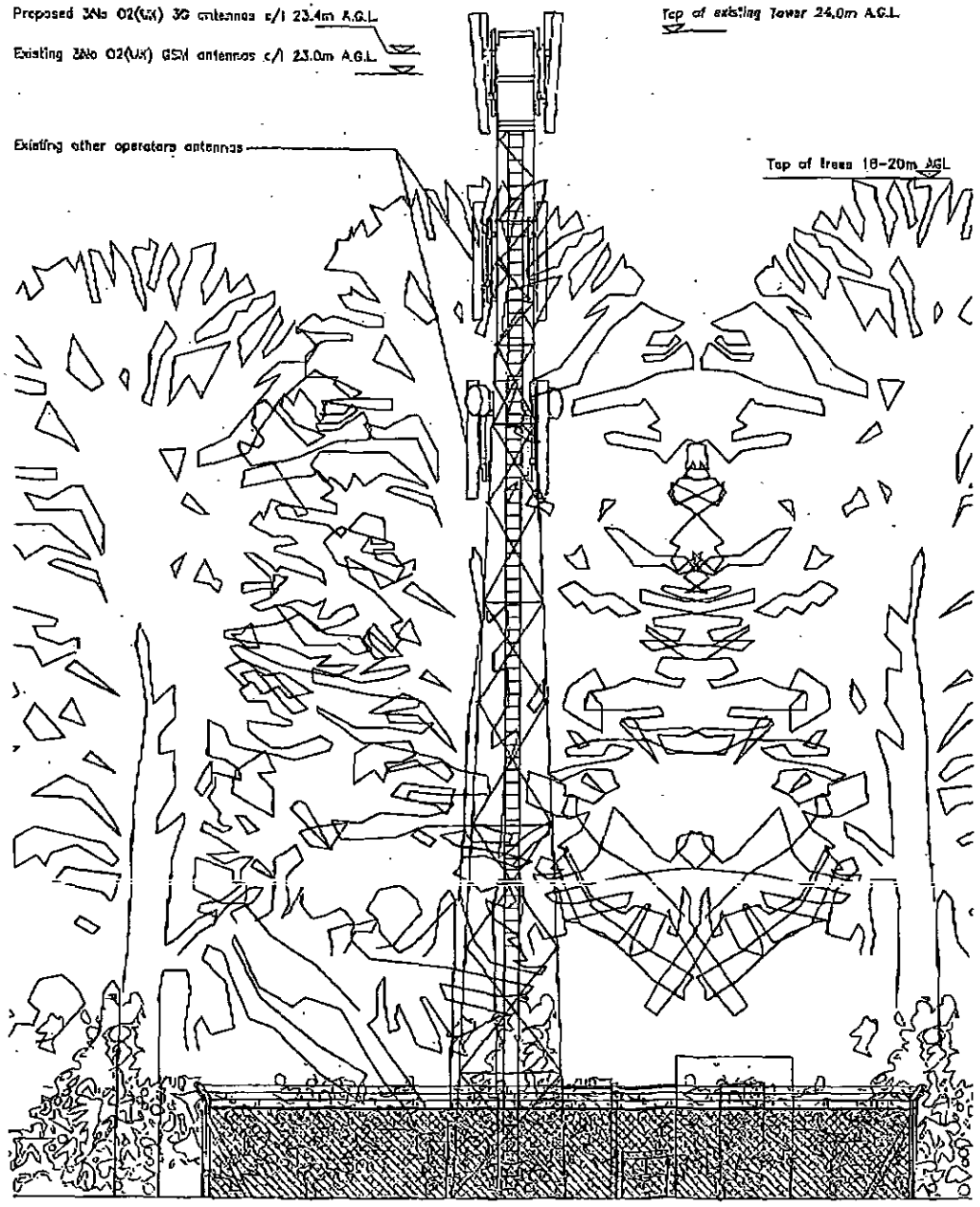

SOUTH EAST ELEVATION – 1:100

NOTES
1. This drawing is the Copyright of O2(UK) and must not be reissued, loaned or copied without written consent
2. Dimensions are in millimetres unless noted otherwise. Do not scale, use written dimensions only

ICNIRP 'Sign off' statement Site

The proposed installation is compliant with ICNIRP recommendations.(Designed in accordance with O2(UK) Datasheet GS4 issue 3.0)

Certified by O2(UK) Radio Planner | Name:

Signature: | Date:

Rev	Date	Description	Drn	Chk
A	22.09.03	First issue for planning	MM	LC

GallifordTry Communications
Wolvey, Hinckley
Leicestershire. LE10 3JF
Tel: +44 (0)1455 222777 Fax: +44 (0)1455 222755

O2 (UK)

Project Title:
Cell 2421U
North Wokingham

Drawing Title:
Elevation

Date: 18.09.03	Drawn: M.Manetos
Scale: As shown	Checked: L.Goodman
Region: M25&South	Approved: L.Goodman

Drawing Number:
P/2421U/003/A

17/03 '04 16:42 FAX 01784487500 APT MARONI 01784487500 005

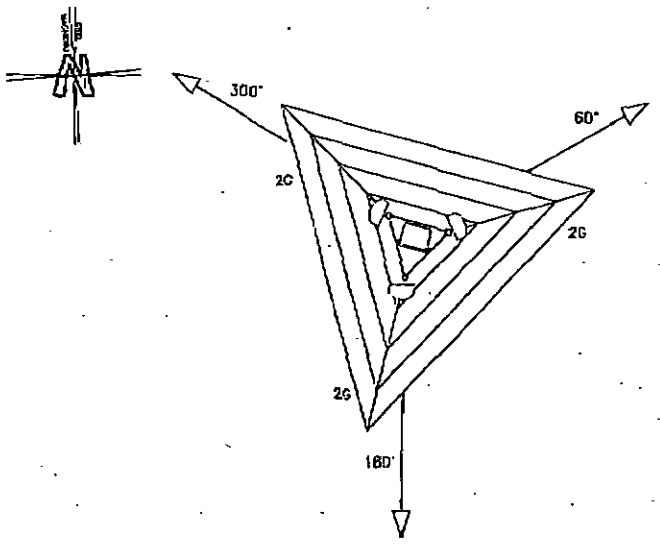

6 No. existing LDF5-50 feeders

EXISTING O2(UK) ANTENNA PLAN AT 24m

(SCALE 1:50)

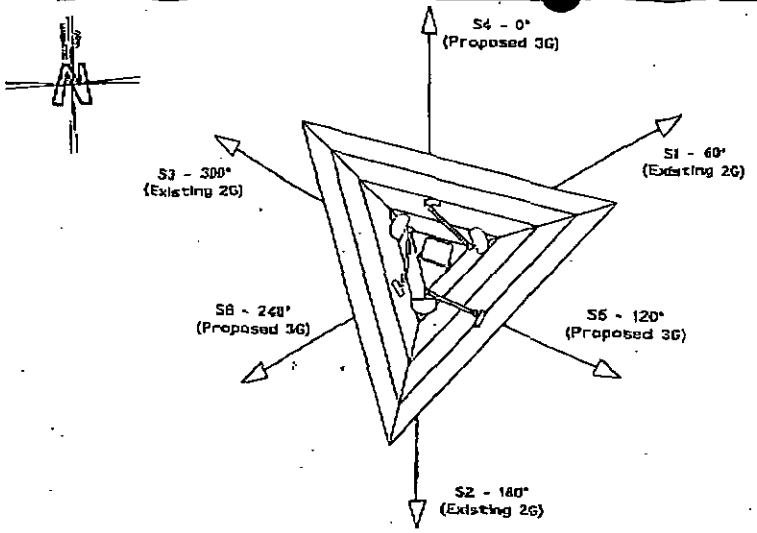

RIGGING NOTES:

1. 6 No. proposed 3G LDF5-50 feeders to be supported on existing feeder brackets on rear of tower ladder
2. 3 no. offset brackets and support poles required for proposed 3G antennas

PROPOSED O2(UK) ANTENNA PLAN AT 24m

(SCALE 1:50)

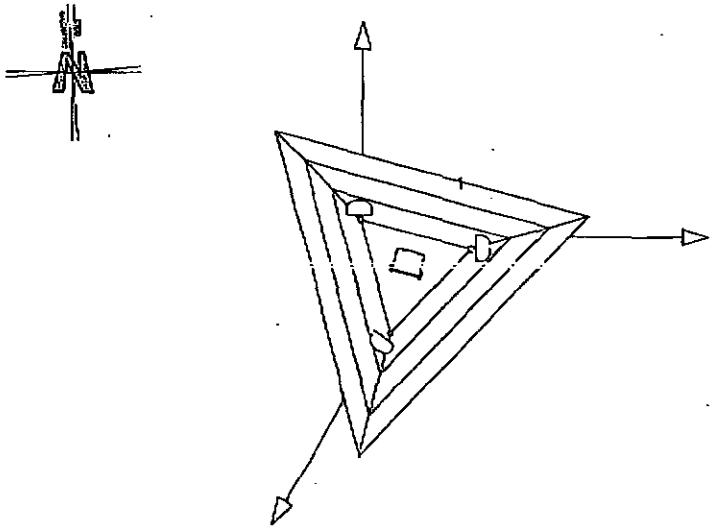

EXISTING VODAFONE ANTENNA PLAN AT APPROX. 19m

(SCALE 1:50)

(SHOWING APPROX. ANTENNA BEARING DIRECTIONS)

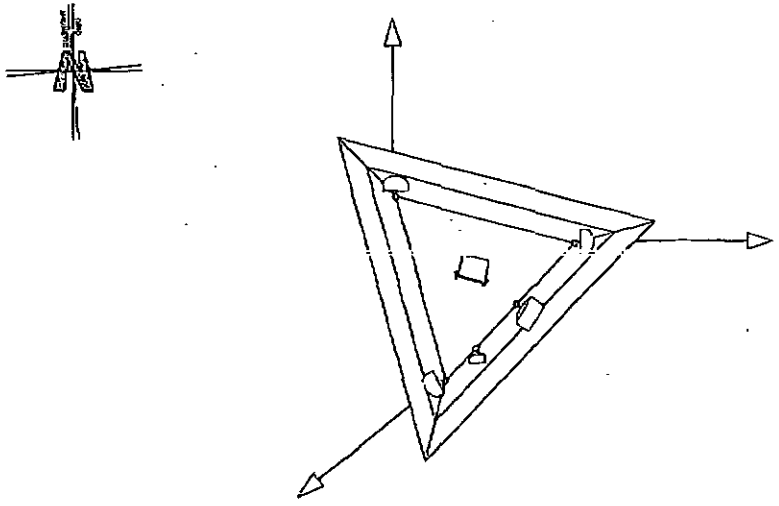

EXISTING T-MOBILE ANTENNA AND DISH PLAN AT APPROX. 15.8m

(SCALE 1:50)

(SHOWING APPROX. ANTENNA BEARING DIRECTIONS)

NOTES

1. This drawing is the Copyright of O2(UK) and must not be reissued, loaned or copied without written consent
2. Dimensions are in millimetres unless noted otherwise. Do not scale, use written dimensions only

ICNIRP 'Sign off' statement Box

The proposed installation is compliant with ICNIRP recommendations.(Designed in accordance with O2(UK) Datasheet 054 Issue 3.0)

Certified by O2(UK) Radio Planner | Name:

Signature: | Date:

Rev	Date	Description	Drn	Chk
A	22.09.03	First Issue for Planning	MM	LG

GallifordTry Communications
Wolvey, Hinckley
Leicestershire. LE10 3JF
Tel: 444 (0)1455 222777 Fax: 444 (0)1455 222758

O2 (UK)

Project Title:
Cell 2421U
North Wokingham

Drawing Title:
Antenna Layout Details

Date: 18/09/03	Drawn: MM
Scale: As shown	Checked: LG
Region: M25&South	Approved: LG

Drawing Number:
P/2421U/004/A

17/03 '04 16:42 FAX 01784487500 APT MARONI 01784487500 006

WORK SHEET FOR : Emy Circuit

Application Number : TL/2000/2606

Applicant : BT Cellnet C/O Grantham, Parsons & Nolan Ltd.

Location : Ringway Highway Services Toutley Depot, Old Forest Road, , Wokingham.
Proposal : Proposed upgrading of existing telecommunications site with addition of equipment cabin and extension to compound.

Site Notice Displayed ? :	YES	NO	DATE
		✓	7/11/00

2 x s/n put up ~~was~~

Date of Neighbour Notifications : .....

Date of Site Visit : .....7/11/00.....

Date Registered : 27/10/2000

Earliest Date for Decision : 17/11/2000

Latest Consultation Date/Site Notice Expiry Date : 17/11/2000

This application will have expired on: 24/11/2000. You need to make a decision 1 day prior to this date for this application to count as determined in less than 8 weeks.

Consultation Responses :

Highways- no objections.
Environmental Health- no objection but comments re risk to health.
Property- council owned land- do not want to enter new lease for proposal until current lease expires - (this is not a planning consideration).
Wokingham Tc- "no objection"

Planning Issues :
Located within industrial/business area in Settlement.
Impact on setting of the area and nearby businesses - (no dwellings nearby)

Application Number: TL/2000/2606

Appraisal :

The proposal is for enlargement of the existing compound to accommodate an additional equipment cabin, with dimensions of 3·7 x 2·5 x 2·8 (high). The width of the compound would be increased but the additional section would not be as deep as existing + would be at the back of the verge nearest the A329(M) highway. It would not be unduly obtrusive as it would be clustered with existing equipment and would be screended from the A329am by existing vegetation. The proposal is for a cabin rather than a mast so there is not the same concern re proximity to buildings with prolonged occupation. Therefore the proposal is considered acceptable.

NOTE location of site on 1:2500 block plan appears to be inaccurate, compound is located at back of verge approximately opposite the boundary of the industrial area and carpark at Tourley depot.

Recomendation : Approval: ☑ **Refusal:** ☐
(tick appropriate box)

Application Number TL/2000/2606
Conditions/Reasons for Refusal

No	Std Con	Std Reas	Non Std Conditions / Reasons for Refusal

RECORD OF SITE VISIT

SITE ADDRESS: Ringway Highway Services Toutley Depot Old Forest Road Wokingham.

APPLICATION NUMBER: TL/2000/2606

OFFICER: Emy Circuit

DATE OF SITE VISIT: 7/11/06

1 SITE/STATUTORY NOTICE DISPLAYED ? put up 2 on 7/11, one on monr or compound + one on lamppost opposite Junction of Toutley Road.

2. DESCRIPTION OF SURROUNDINGS

verge between A329(m) and industrial/business area.

3. DESCRIPTION OF SITE/BUILDING

compound + existing mast + cabins.

4. RELATIONSHIP TO ADJOINING PROPERTIES

hedge + trees screen from A329(m)
separated from road to depot by verge

5. SITE CONSTRAINTS

TREES

ACCESS/PARKING

LEVELS

BOUNDARY TREATMENT

OTHERS

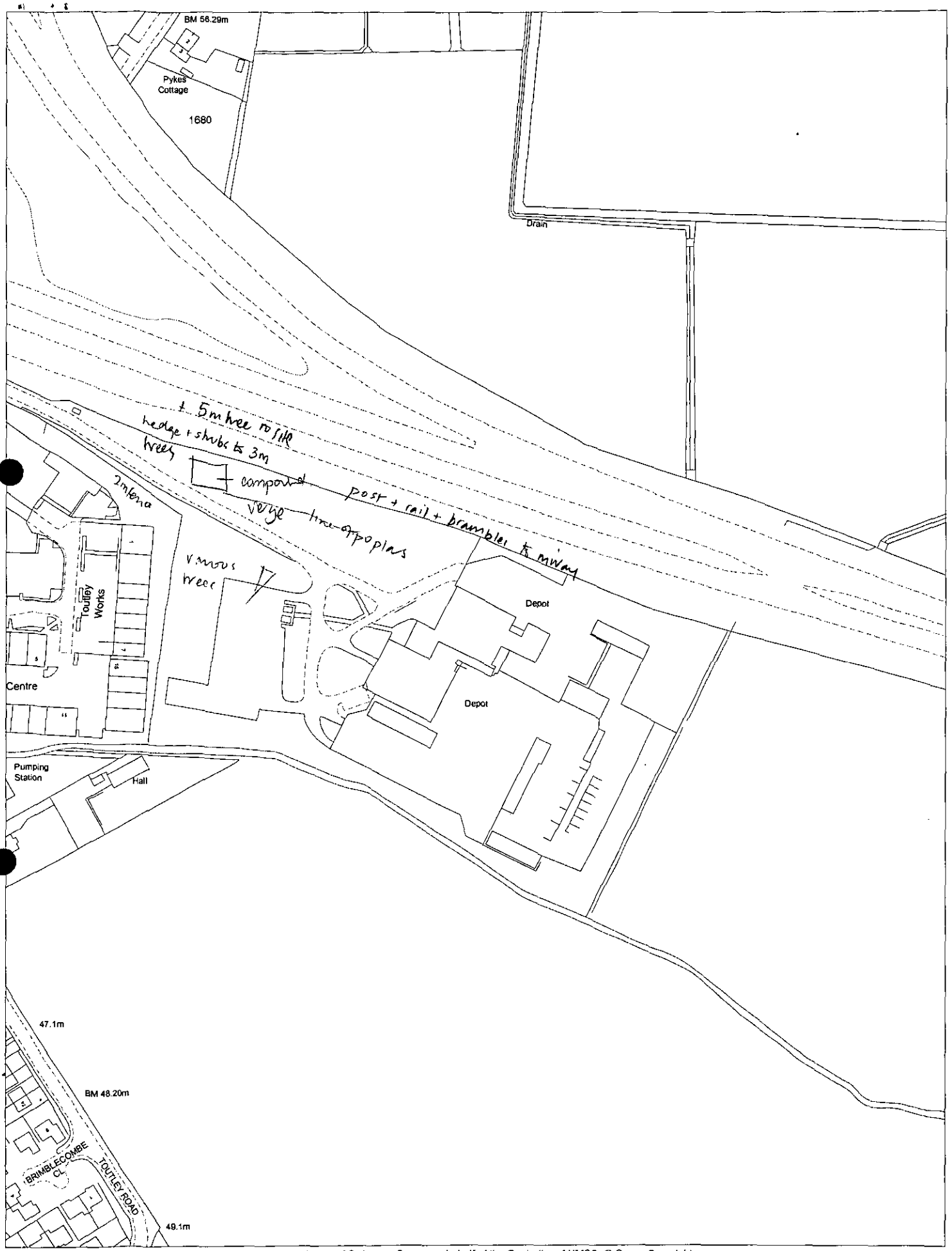

This map is based upon Ordnance Survey material with the permission of Ordnance Survey on behalf of the Controller of HMSO. © Crown Copyright.
Unauthorised reproduction infringes Crown Copyright and may lead to prosecution or civil proceedings.Wokingham District Council Licence LA086134

Development Control Section, Environmental Services, Wokingham District Council.

6 November 2000

Scale: 1 : 2500

N
W E
S

Received by Wokingham District Council

Application No: TL/2000/2606

Proposal:
Proposed upgrading of existing telecommunications site with addition of equipment cabin and extension to compound.

Location:
Ringway Highway Services Toutley Depot, Old Forest Road, , Wokingham.

The application is available for inspection at Wokingham District Council's offices during the following times:

PLANNING DEPARTMENT, SHUTE END, WOKINGHAM TEL (0118) 974 6428
8.30 - 5.00 Monday - Thursday & 8.30 - 4.00 Friday

WOODLEY LIBRARY HEADLEY ROAD WOODLEY (9.30am - 7.00pm Mon, Thurs & Fri. 9.30am - 5.00pm Tues, 9.30am - 1.00pm Saturday. closed all day Wednesday). If you intend to view this application at Woodley Library (see details above) please allow 4 days from the date of this notice for delivery of plans.

Comments should be sent in writing QUOTING THE APPLICATION NUMBER to the Case Officer Emy Circuit P.O. Box 157 Council Offices, Shute End, Wokingham Berkshire, RG40 1WR to arrive on or before 17/11/2000. Written comments submitted will become available for public inspection.

In view of the very large number of planning applications and letters of comment received, it will not normally be possible for an individual reply to observations made. However any comments will be taken into account when the application is determined and you will be notified of the decision.

Head Planning and Transportation

31 October 2000

Tel: (0118) 974 6479 (Direct Line)
Fax: (0118) 974 6484
Email: Emy.Circuit@wokingham.gov.uk
Date:
My ref: EXC/TL/2000/2606
Your ref: 2421/lj/23/10/00

Lee Johnson
Grantham, Parsons ad Nolan Ltd
Triumph House
Birmingham Road
Meriden
Nr Coventry
CV5 9AZ

Environmental Services Department
Planning Services
P.O. Box 157
Shute End, Wokingham
Berkshire RG40 1WR
Tel: (0118) 974 6000
Fax: (0118) 974 6484
Minicom No: (0118) 974 6991
DX: 33506 – Wokingham

Dear Mr Johnson

PROPOSED UPGRADING OF EXISTING TELECOMMUNICATIONS SITE WITH ADDITION OF EQUIPMENT CABIN AND EXTENSION TO COMPOUND AT TOUTLEY DEPOT, OLD FOREST ROAD, WOKINGHAM – TL/2000/2606

Pleas find enclosed the decision notice for the above application.

Yours sincerely

John Mitchell,
Development Control Manager

Wokingham District Council Environmental Services Department, Berks, RG40 1WR PO Box 157, Shute End, Wokingha

FAX

Date: 23 November 2000

Number of pages including cover sheet: 3

To: Lee Johnson

Phone:

Fax phone:

CC:

From: Emy Circuit

Phone: 0118 974 6479.

Fax phone: 0118 9746484

REMARKS: ☐ Urgent ☐ For your review ☐ Reply ASAP ☐ Please comment

Re. TL/2000/2606, Tourley Depot.

WOKINGHAM TOWN COUNCIL CONSULTATION SHEET

Case officer: Emy Circuit

Application Number: TL/2000/2606

Proposal: Proposed upgrading of existing telecommunications site with addition of equipment cabin and extension to compound.

Site Address: Ringway Highway Services, Toutley Depot, Old Forest Road, Wokingham

Applicant: BT Cellnet C/O Grantham, Parsons & Nolan Ltd

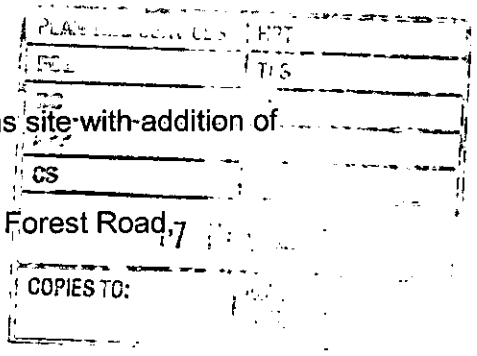

Your observations are required in respect of this application by **17/11/2000**

No objection

SIGNED: _____ **DATE:** 15/11/00

CLERK TO Wokingham Town Council

Tel: (0118) 974 6479 (Direct Line)
Fax: (0118) 974 6484
Email: Emy.Circuit@wokingham.gov.uk
Date: 17 November 2000
My ref: EXC/TL/2000/2606
Your ref: 2421/lj/23/10/00

Lee Johnson
Grantham, Parsons ad Nolan Ltd
Triumph House
Birmingham Road
Meriden
Nr Coventry
CV5 9AZ

Environmental Services Department
Planning Services
P.O. Box 157
Shute End, Wokingham
Berkshire RG40 1WR
Tel: (0118) 974 6000
Fax: (0118) 974 6484
Minicom No: (0118) 974 6991
DX: 33506 – Wokingham

Dear Mr Johnson

PROPOSED UPGRADING OF EXISTING TELECOMMUNICATIONS SITE WITH ADDITION OF EQUIPMENT CABIN AND EXTENSION TO COMPOUND AT TOUTLEY DEPOT, OLD FOREST ROAD, WOKINGHAM – TL/2000/2606

With regard to the above application, I am writing to inform you that prior approval is required. This is in accordance with Policy WIC14 of the Wokingham District Local Plan (Deposit Draft), as the site is within 200 metres of buildings regularly used by people.

Yours sincerely

M L Thorp,
Principal Development Control Officer

Wokingham District Council Environmental Services Department, PO Box 157, Shute End, Wokingham, Berks, RG40 1WR

FAX

Date: 17 November 2000

Number of pages including cover sheet: 2

To:
Lee Johnson
Grantham Parsons and
Nolan Ltd

Phone:

Fax phone:

CC:

From:
Emy Circuit
WDC

Phone: 0118 974 6479

Fax phone: 0118 9746484

REMARKS: ☐ Urgent ☐ For your review ☐ Reply ASAP ☐ Please comment

Please find attached correspondence regarding the TL application at Toutley Depot, Wokingham

E Circuit

* * * COMMUNICATION RESULT REPORT (17.NOV.2000 12:01) * * *

TTI WDC PLAN&TRANSPORT

FILE	MODE	OPTION	ADDRESS (GROUP)	RESULT	PAGE
194	MEMORY TX		901676521081	OK	P. 2/2

REASON FOR ERROR
E-1) HANG UP OR LINE FAIL
E-2) BUSY
E-3) NO ANSWER
E-4) NO FACSIMILE CONNECTION

36107

WOKINGHAM DISTRICT COUNCIL

MEMORANDUM

03
ACK:
FILE:

From: Suzanne Mclaughlin
Environmental Health

My Ref: SEM/20003111

To: Emy Circuit
Planning

Your Ref: TL/2000/2606

Date: 2 November 2000

PROPOSED UPGRADING OF EXISTING TELECOMMUNICATIONS SITE ADDITION OF EQUIPMENT CABIN AND EXTENSION TO COMPOUND

LOCATION: RINGWAY HIGHWAY SERVICES TOUTLEY DEPOT, OLD FOREST ROAD, WOKINGHAM

I have evaluated the above proposals and have no objections to planning consent but have the following comments to make in relation to this proposal:

There have been questions raised as to the possibility of adverse health effects from electromagnetic radiation from telecommunication base stations and their positioning in relation to residential development and, in particular schools.

The National Radiological Protection Board (NRPB) was established by the Radiological Protection Act 1970 and is responsible for conducting research and providing advice and services for protection against ionising and non-ionising radiation's in the U.K. They are continually reviewing the vast body of world-wide research on the subject.

The NRPB's current advice is that there is no proven human health risks from these installations. This position is confirmed by the Chartered Institute of Environmental Health and pressure groups such as Powerwatch network . There are however countries and areas of the world where precautionary measures have been adopted , e.g. New Zealand Ministry of Education has issued a policy statement preventing cellular phone antennas from being sited at state schools in the future.

Further research is currently being undertaken into possible health implications although to date no definitive statement can be made.

The NRPB have set up an Advisory Group to look into this matter. This Group has concluded, in reference to buffer zones for sensitive developments, that there is neither a clear basis from which to derive a meaningful assessment of risk , nor is there any indication of how putative risk might vary with exposure. Thus there is no scientific justification for seeking to reduce exposure in these situations and that a decision to do so must be based on social and economic rather than scientific grounds.

The Chartered Institute of Environmental Health's current policy is as follows :

"The CIEH with regard to overhead and buried high voltage power lines, electricity sub-stations, wind generators, microwave and radio transmitters, mobile telephone base stations

and other similar installations emitting electro magnetic radiation (EMR) in close proximity to dwellings considers :

a) That the effect on human health based on current scientific evidence is insignificant and not proven.
b) That there is no convincing national or international scientific research linking Electromagnetic Radiation and deterioration in human health.
c) That a precautionary approach to restricting building or access near such installations (apart from physical safety barriers) cannot be sustained on health grounds alone and if adopted must be based on access, amenity, and public acceptability considerations.
d) That local authorities should adopt a policy on how to address questions from the public on Electromagnetic radiation from such sources."

Please contact me if you require further information.



HIGHWAYS CONSULTATION SHEET

From: Emy Circuit **Date:** 31 October 2000

Application Number: TL/2000/2606

Proposal: Proposed upgrading of existing telecommunications site with addition of equipment cabin and extension to compound.

Parish: WOKINGHAM TOWN

Site Address:
Ringway Highway Services Toutley Depot, Old Forest Road, , Wokingham.

Applicant:
BT Cellnet C/O Grantham, Parsons & Nolan Ltd.

Your observations are required in respect of this application within **7 days** of the above date.

✓ below as applicable;

1) ☐ Recommend refusal for the reason(s) **stated below**;
2) ☐ Recommend approval but with condition(s) & reason(s) **stated below**;
3) ☑ Recommend approval with **no** condition(s) or reason(s).

NO HIGHWAY OBJECTIONS.

Signed: _____ **Print name:** Adam Coggins.

1/11/00

FROM:

Property Dept

To:

From: Emy Circuit Development Control.

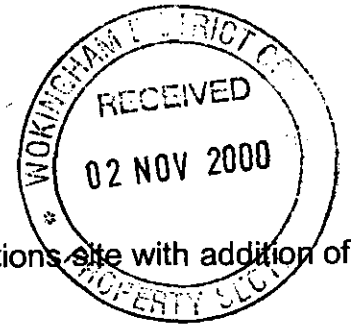

Date: 31 October 2000

Application Number: TL/2000/2606

Proposal: Proposed upgrading of existing telecommunications site with addition of equipment cabin and extension to compound..

Site Address:
Ringway Highway Services Toutley Depot, Old Forest Road, , Wokingham.

Applicant:
BT Cellnet C/O Grantham, Parsons & Nolan Ltd.

Your observations are required in respect of this application within **7 days** of the above date.

The Council is the freehold owner of the Toutley Depot site. BT Cellnet have a lease for their equipment compound on site. The operator has approached Property Services with the proposal to extend the existing compound as shown.

At present a new lease for the current equipment has yet to be completed.

As Landlord we would be unwilling to enter into a new agreement allowing this proposal until the outstanding lease has been completed.

DANIEL COWIN
PROPERTY SERVICES.

To:
Property Dept

From: Emy Circuit

Date: 31 October 2000

Application Number: TL/2000/2606

Proposal: Proposed upgrading of existing telecommunications site with addition of equipment cabin and extension to compound..

Site Address:
Ringway Highway Services Toutley Depot, Old Forest Road, , Wokingham.

Applicant:
BT Cellnet C/O Grantham, Parsons & Nolan Ltd.

Your observations are required in respect of this application within **7 days** of the above date.

WOKINGHAM DISTRICT COUNCIL
RECEIVED
02 NOV 2000
PROPERTY SECT

28 DAYS
24/11/00

WOKINGHAM D.C. DEVELOPMENT CONTROL

Start date: 27 OCT 2000	Map No. ..... Site .....
Officer: EXC | Application No. TL/2000/2606	Easting: ..... Flood Pln .....
	Northing: ..... Mineral .....

Level: ☐ Sub Committee ☑ Delegated ☐ Sec. State
☐ Incorrect Fee ☐ Invalid ☐ PD

Description: Telecommunications
(TL) PROPOSED UPGRADING OF EXISTING SITE WITH ADDITION OF EQUIPMENT CABIN AND EXTENSION TO COMPOUND

Location: TOUTLEY ROAD DEPOT, ~~TOUTLEY ROAD~~ OLD FOREST RD.

Parish: WOKINGHAM Ward: .....

Applicant: BT CELLNET

Fee Received 35-00 (5) Required ..... Additional ..... Refund .....

Enforcement Section to be notified ☐ tick if required

Additional information required for validation

		Reason	Requested	Received
1	1:2500 OS location plan showing property edged in blue/red			
2	1:500 block plan showing existing & proposed dev. + adj. Properties			
3	Forms unsigned			
4	Correct S 66 certificate			
5	Elevation plans			
6	Floor plans			
7	Metric scale disclaimer			
8	Encroachment letter			
9	Miscellaneous			

APPLN NO. _____

ACTION REQUIRED BY DEVELOPMENT CONTROL

Conservation Area .....

Listed Building 1 2 2*

Advertisement Required .....

Date Site Notice Sent : ..... Parish Council Informed - YES / NO

INTERNAL CONSULTATIONS

Building Control .....
Landscape .....
Trees .....
Conservation Officer .....
Environmental Health .....
Housing .....
Leisure & Cultural services .....
Public Rights of Way .....
Property .....
District Secretary (only if called in by SOS) .....
Policy & Plans .....
Strategic Planning (JSPU) .....
Minerals (BABTIE) .....
Archaeological Site (BABTIE) : .....
Education .....
Social Services .....
Highways .....

EXTERNAL CONSULTATIONS

Adjacent D P A : .....
Adjacent Parish : .....
Southern Electricity Board .....
British Gas .....
PSA Oil Pipeline .....
Transco : .....
Environment Agency .....

Rail Track .....
Police Arch. Liaison Officer .....

HERITAGE BODIES

The Georgian Group .....
Ancient Monuments Society .....
Council for British Arch. .....
RCHME .....
Telecommunications (NRPB) : .....
Sport England : .....

OTHERS:

.....
.....
.....

NEIGHBOURS: See map.

.....
.....
.....
.....
.....
.....
.....
.....
.....

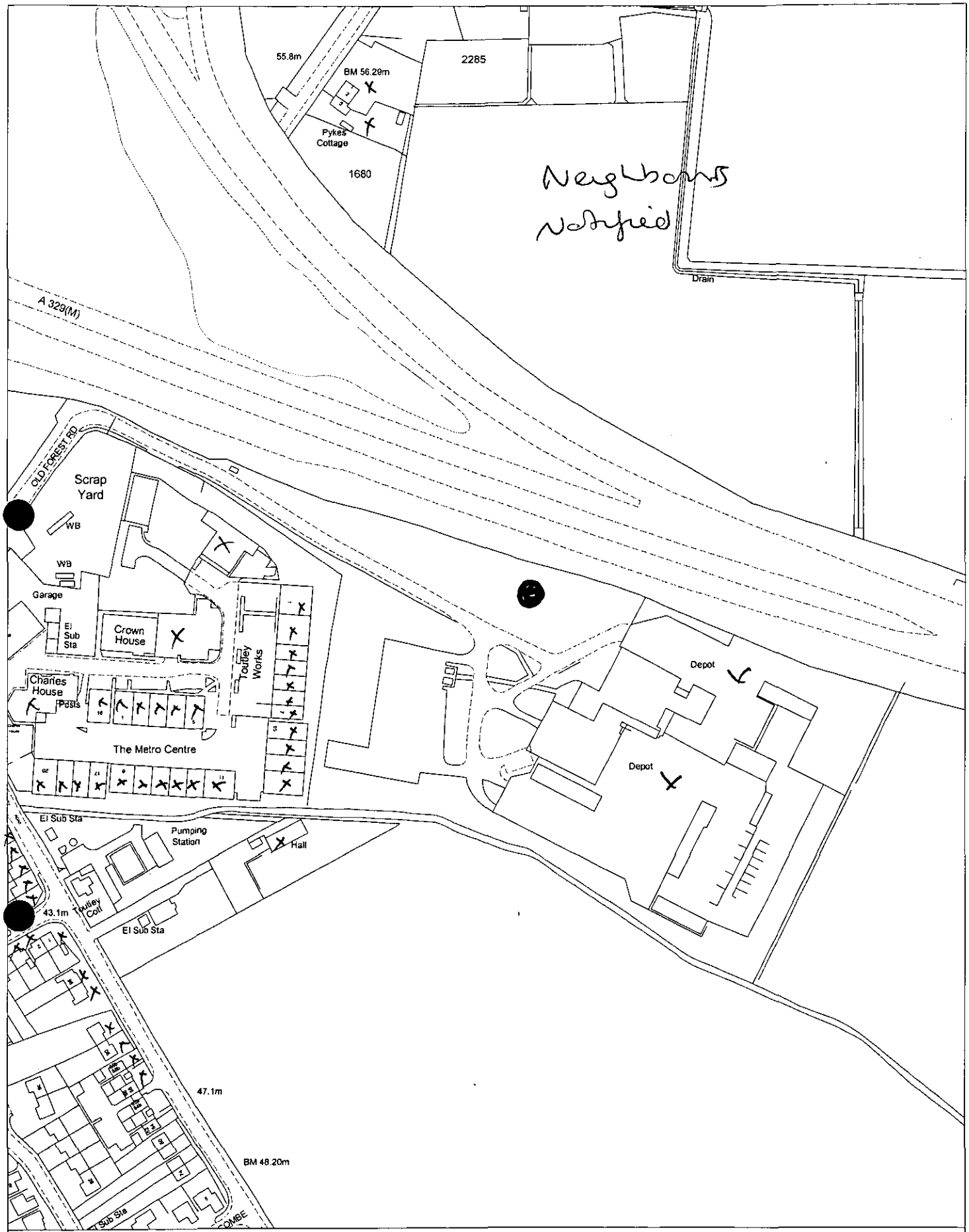

Site Plan, Scale: 1 to 2500

This copy has been produced specifically for the map return scheme purposes only. No further copies may be made.

This map is reproduced from Ordnance Survey material with the permission of Ordnance Survey on behalf of the Controller of HMSO Office. © Crown Copyright. Wokingham District Council, Licence No. LA086134

Date: 30 October 2000

N
W E
S

TL/2000/2606

27 OCT 2000

GRANTHAM, PARSONS AND NOLAN LTD

ARCHITECTS, PROJECT MANAGERS.
CIVIL & STRUCTURAL ENGINEERING CONSULTANTS

Triumph House, Birmingham Road, Meriden, Nr. Coventry CV5 9AZ
Telephone: 01676 522866 Facsimile: 01676 521081
521181

GPN GROUP

Wokingham District Council
Planning Department
Shute End
Wokingham
Berkshire

Our Ref: 2421/lj/23/10/00
Date: 24 October 2000

Dear Sir,

Proposed BT Cellnet Installation at: North Wokingham, Touley Road Depot, Touley Road, Wokingham, RG40

I refer to my discussion with your planning officer Mrs Heather Morgan on 23 October 2000 with regard to BT Cellnet's upgrade proposals for the above site.

On behalf of BT Cellnet, a licensed public telecommunications code system operator, who are proposing to carry out permitted development in accordance with Part 24 of the Town and Country Planning (General Permitted Development) Order 1995 and in accordance with conditions A.2 (4) and (4A) of part 24, we apply for determination as to whether prior approval is required for the siting and appearance of erecting an equipment cabin measuring approximately 3.7m (length) x 2.5m (width) x 2.8m (height). This is shown on the accompanying location plan and drawings (2421/001, 2421/002, 2421/003).

We enclose a cheque for the sum of £35.00 which is the appropriate fee.

If you would like to discuss this matter or require further information, please contact me on 01676 522080 or 07730 955271

Yours faithfully

Lee Johnson

Lee Johnson
Acquisition Surveyor

Enc:
Cheque for £35.00
Drawings 2421/001, 2421/002, 2421/003

DIRECTORS
M.D. Grantham BSc MSc ACGI CEng MICE MI Struct E MIHE
J.M. Smith BSc Dip Arch (B'ham) RIBA
A.W. Hemming BSc CEng MICE MI Struct E

VAT No. 455 7642 22 Registered Office: Wood Street Chambers Stratford-upon-Avon Registered No. 1879981 England

INFORMATION TO ACCOMPANY AN APPLICATION FOR PRIOR APPROVAL DETERMINATION UNDER PART 24 OF THE GPDO IN RESPECT OF PERMITTED DEVELOPMENT BY TELECOMMUNICATIONS CODE SYSTEM OPERATORS

1. PRE-APPLICATION CONSULTATION WITH LOCAL PLANNING AUTHORITY.

(I) Licence notification i.e. pre rollout of network

Name of LPA contact: **Wokingham District Council**

(ii) On sites in specific cell(s):

Name of LPA contact: **Wokingham District Council**

2A. NAME AND ADDRESS OF APPLICANT.

Name: **BT Cellnet**
Northampton Switch Facility
5 Reynoldston Close
Brackmills Industrial Estate
Northampton
Northamptonshire
NN4 7BX

Tel: 01604 795701

2B. AGENT'S NAME, ADDRESS AND CONTACT.

Name: **G.P.N. Ltd**

Address: **Triumph House, Birmingham Road, Meriden, Nr.Coventry, West Midlands**

Postcode: **CV5 9AZ** Tel: **01676 522080**
Contact: **Lee Johnson**

2C. LOCATION OF PROPOSAL.

Location : **North Wokingham**
Touley Road Depot
Touley Road
Wokingham
RG40 1NR

2D. O.S.SHEET / GRID REFERENCE.

Sheet and grid reference of proposed development.
Sheet:
Grid reference: **SU 8030 7050**

3. PURPOSE OF DEVELOPMENT.

In accordance with the rollout programme for third generation mobile telephony licences granted by the Department of Trade and Industry

4. THE PROPOSED STRUCTURE

Type of structure: **N/A**

Overall height: **N/A**
Height of existing building **N/A**

Equipment housing **BT Cellnet 3G equipment Cabin measuring approx. 3.7m x 2.5m x 2.8m (high)**

Materials (as Applicable):cabin etc:-type of material & external colour
Galvanised steel, aircraft grey
Location of and distance to nearest residential or commercial property:
N/A

5. DISTANCE FROM AIRFIELD OR AERODROME.

Will the structure be within 3 km of an aerodrome or airfield **No**

Has the Civil Aviation Authority or Secretary of State for Defence been notified **No**

Signed:

Lee Johnson

Lee Johnson
Acquisition Surveyor

G.P.N.Ltd

On behalf of BT Cellnet

24 October 2000