*Senior Director:*
Julian Forbes-Laird
BA(Hons), Dip.GR.Stud, MICFor, MRICS, MEWI, Dip.Arb.(RFS)

Institute of Chartered Foresters
Registered Consultant

# SITE
# SHINFIELD LOCAL CENTRE—LAND EAST OF FOODSTORE

RICS

# PLANNING SUBMISSION (ARBORICULTURE)

EXPERT WITNESS INSTITUTE

For Reserved Matters application

## - TREE SURVEY TO BS5837:2012
## - TREE PROTECTION PLAN & ARBORICULTURAL METHOD STATEMENT

*Prepared for:* Shinfield Consortium

*FLAC Instruction ref:* 28-1018

*Issued:* October 2022

*Technical Director*
Patrick Stileman
BSc(Hons), MICFor ,MRICS, RC.Arbor.A, CUEW, Dip.Arb(RFS)

*Operations Director*
Andrew Colebrook
MICFor, M.Arbor.A, Dip.Arb(RFS)

*Senior Associate Director*
Ben Abbatt
BA(Hons), MICFor, MRICS, RC.Arbor.A, CEnv, Dip.Arb(RFS)

Dendron House
Barford Road • Blunham
Bedford • MK44 3ND
T 44 (0)1767 641648
F 44 (0)1767 660330
E enquiries@flac.uk.com
www.flac.uk.com

## 1 INTRODUCTION

### Instruction

1.1 Forbes-Laird Arboricultural Consultancy (FLAC) is instructed by Shinfield Consortium to provide details of a tree survey, and to set out how retained trees shall be protected during the development process on land known as Shinfield Local Centre to the east of the proposed foodstore (hereafter referred to as 'the site').

### Planning application

1.2 A Reserved Matters planning application is being submitted for the site pursuant to Outline planning permission VAR/2014/0624 (a variation of 0/2010/1432) for the erection of seven dwellings, parking spaces, open space and landscape treatment. (Appearance, Landscaping, Layout and Scale to be considered).

### Tree survey

1.3 Trees were surveyed by Forbes-Laird Arboricultural Consultancy (FLAC) in accordance with BS5837:2012 *'Trees in relation to design, demolition and construction – Recommendations'* initially in 2019, but up-dated most recently in October 2022. The data from the tree survey is included within this report.

### Statutory tree protection

1.4 A GIS map on Wokingham Council's website shows that no trees at the site are protected by a tree preservation order (TPO).

1.5 The site is not located within a conservation area, a designation which would impose provisional statutory protection to trees if applicable.

1.6 The site is not exempt from provisions within the Forestry Act 1967. This Act requires that a felling licence be obtained for the felling of more than five cubic metres of timber per calendar quarter, unless exceptions apply (one such being the grant of full planning consent).

## 2 TREE RETENTION AND REMOVAL

2.1 A BS5837-compliant assessment includes differentiation of the quality of the trees according to that Standard's Table 1, which provides for trees to be placed into one of four quality categories:

A High quality
B Moderate quality
C Low quality
U Trees which are unretainable in viable condition, regardless of development

2.2 Following categorisation, the impact of any given set of proposals on a tree population can be assessed in terms of the retention or removal of trees within each quality category. The impact of proposals based upon our assessment of the site layout plan for existing trees (comprising both individual trees and trees within tree groups) is summarised in Table 1 below.

*Table 1. Tree numbers by quality and value categories, after impacts by the proposals*

| ***Grade*** | ***Trees before*** | ***Trees after*** | ***Trees lost*** | ***% of tree grade lost*** | ***% of tree grade retained*** |
|---|---|---|---|---|---|
| U | 40 (approx.) | 0 | 40 | 100 | 0 |
| A | 2 | 2 | 0 | 0 | 100 |
| B | 4 | 4 | 0 | 0 | 100 |
| C | 9 | 9 | 0 | 0 | 100 |

**Tree removal to facilitate development**

2.3 As can be seen from Table 1 above, only Category U trees are to be removed – these being a group of dead and dying elm trees adjacent to the footpath at the northern end of the site. Their removal is not required to facilitate the development, and consequently no tree removal is required for this purpose.

## 3 VETERAN TREE

3.1 Ancient trees and veteran trees impose additional planning restrictions to development. Section 180 c) of the National Planning Policy Framework (July 2021) states as follows:

> (c) development resulting in the loss or deterioration of irreplaceable habitats (such as ancient woodland and ancient or veteran trees) should be refused, unless there are wholly exceptional reasons [63] and a suitable compensation strategy exists; and

(Footnote 63 states that wholly exceptional reasons would include, for example, nationally significant infrastructure projects where public benefit would clearly outweigh loss).

3.2 The NPPF defines ancient and veteran trees as follows:

> A tree which, because of its age, size and condition, is of exceptional biodiversity, cultural or heritage value. All ancient trees are veteran trees. Not all veteran trees are old enough to be ancient, but are old relative to other trees of the same species. Very few trees of any species reach the ancient life-stage.

3.3 FLAC has an in-house, inquiry-tested methodology for assessing ancient and veteran trees based on the NPPF definition called Recognition of Ancient, Veteran & Notable Trees (RAVEN). Using RAVEN we have identified one veteran trees at the site (Tree 9032). Our RAVEN assessment is included in this document.

3.4 The veteran tree has been clearly marked on the Tree Protection Plan and, in line with the latest Forestry Commission and Natural England Standing Advice published in January 2022 a veteran tree buffer (VTB) has been shown. The VTB is based on a radial distance of 15x stem diameter with no upper cap.

3.5 Pruning has been specified to the veteran tree due to its structural condition, with crown failure having been identified as a foreseeable hazard. Refer also to the Tree Survey Data.

## 4 TREE PROTECTION DURING IMPLEMENTATION

4.1 The protection of retained trees during the works is required by physical protection measures comprising the exclusion of access over the RPA and VTB of retained trees with the use of robust tree protection fencing. Trees are also to be protected by the construction of paths using a permeable no-dig surface above ground level.

4.2 Details of the position and specification of physical tree protection measures, sequencing, prohibitions & precautions, and arboricultural supervision, are shown on the Tree Protection Plan (TPP) – drawing no. 28-1018.34 included at the end of this report. The TPP includes a written Arboricultural Method Statement.

FLAC

# SHINFIELD LOCAL CENTRE – LAND EAST OF FOODSTORE: KEY TO TREE SURVEY DATA SCHEDULE

**Note**

This survey has been undertaken in compliance with BS5837:2012; it is not intended to be a tree safety survey. Any notes offered on structural integrity of trees are incidental, though where trees are considered to be in immediately hazardous condition (identified by red font in the *Structural condition & Notes* column, see below*)*, our recommendations given for immediate intervention should be put in hand by the owner / site manager as soon as can be arranged.

Trees are dynamic living organisms capable of achieving considerable size and structural complexity. They are exposed to and can become damaged by the elements and by human activity, and have co-evolved with decay-causing organisms that can degrade and sometimes destroy their structural integrity. Due to genetic characteristics and local microenvironmental factors this integrity can be innately uncertain. The laws and forces of nature dictate a natural failure rate even among trees that are healthy and structurally sound. By their very nature, therefore, trees cannot be considered entirely hazard-free.

Tree surveys and / or tree inspections are, inherently, only a snapshot in time of the physiological and structural condition of the trees concerned.

Unless otherwise stated in our reporting material, all such surveys and inspections are undertaken from ground level and no internal inspections or tests have been undertaken. Any structural defects present might be not be visible, for example being masked by vegetation, whether the tree's foliage, plants growing round the base of the tree, or climbing plants growing on the stem and into the crown.

Unless otherwise states, the survey data should be considered time-limited **for planning purposes** to a maximum of three years (absent revisions of BS5837, which render pre-existing data obsolete).

**FLAC Ref. No.**

Tree numbers per FLAC dwg no. 28-1018.01 and subsequent drawings

In line with the advice of BS5837:2012, where trees occur as a cohesive group feature (prefixed TG for tree group or WG for woodland group), they are assessed as such

Size data for TG or WG are given as mean figures for trees at roughly the 80 percentile of the population concerned. Trees in the 90-100 percentile range for the group are identified on the TSP

Trees within TG / WG boundaries that have more than one stem and which are sub-dominant within the TG / WG (i.e. <80 percentile) are subsumed within the TG / WG data; dominant multi-stemmed trees (i.e. >80 percentile) within TG / WG boundaries are listed as individual trees

TG / WG outlines follow the mapping base (typically either topographical survey or geo-rectified aerial imagery)

Hedges (domestic) are recorded prefixed H and are always excluded from the provisions of the Hedgerows Regulations 1997

Hedgerows (rural) are recorded prefixed HR and possibly fall within the provisions of the Hedgerows Regulations 1997

All numbering starts from *x*001 **for each type of vegetation**, where *x* identifies the surveyor (9000 series = JFL). Thus:

| | |
|---|---|
| 9000 | Individual tree |
| TG9000 | Tree group |
| WG9000 | Woodland group |
| H9000 | Domestic hedge |
| HR9000 | Rural hedgerow |

The addition of the FLAC instruction ref. ahead of the tree number provides a unique, non-repeated reference number for the particular tree in question

Any trees omitted from the topo survey are listed on the referenced plan, though their positions are only shown indicatively. Off-site trees are included where deemed relevant, though their positions are also shown indicatively if omitted from the topo base

**TPO Ref.**

Statutory protection listing for individual trees, TG and WG
**ATTENTION: SEE NOTE IMMEDIATELY BELOW**

**Note**
This column is only completed in cases where FLAC has been instructed to undertake a TPO search and correlation to FLAC reference numbers. The absence of data in this column **must not** be taken to indicate that the trees concerned are not under TPO protection. Statutory protection may also arise from the trees' location within a Conservation Area. Further statutory control over tree removal may be conferred by the Forestry Act 1967

**Species**

Tree species as listed in the schedule by common name. Species present are:

| *Common name* | *Botanical name* | *Provenance* | *Notes* |
|---|---|---|---|
| Box elder | Acer negundo | Exotic | |
| Crack willow | Salix fragilis | Native | |
| Elm | Ulmus procera | Native | |
| Field maple | Acer campestre | Native | |
| Hornbeam | Carpinus betulus | Native | |
| Lawson cypress | Chamaecyparis lawsoniana | Exotic | |
| Leyland cypress | x Cupressocyparis leylandii | Exotic | |
| Lilac | Syringa vulgaris | Exotic | |
| Norway maple | Acer platanoides | Exotic | |
| Pedunculate oak | Quercus robur | Native | |
| Silver birch | Betula pendula | Native | |

**Tree Count**

For trees assessed as groups (ident. prefix TG), number of trees present, according to:

| | |
|---|---|
| 2-10 trees | Accurate count |
| 11-50 trees | Close estimate |
| 51-100 trees | Estimate |

**Area $m^2$**

For trees assessed as woodland (ident. prefix WG), existing area in square metres within survey envelope, derived from CAD interrogation of the completed tree survey plan

**Ht. (m)**

Tree height in metres

*Either:*

**Crown Spread**

For individual trees, measured radial crown spread in metres, listed for each of the four cardinal points

*Or:*
**MRCS**

For trees assessed as groups or woodland, an estimated mean radial crown spread in metres for trees at the 80 percentile size

**Note**
For trees assessed as woodland, sample measurements for canopy overhang beyond woodland boundary (i.e. hedgerow, fence, ditch etc.) are given on the tree survey plan

*Or:*

**Mean Width**

Mean width in metres of hedge or hedgerow

**Length**

Approximate length in metres of hedge or hedgerow

**Ht. 1st Br.**

For individual trees and trees assessed as groups or woodland, height in metres above ground of attachment point of first significant branch (cardinal point may be given indicating growing direction)

**Ht. Can.**

For individual trees and trees assessed as groups or woodland, mean height in metres of lower extent of tree canopy above ground

**Stem Count**

For individual trees, number of stems present below 1.5m AGL. Stem count affects diameter entry as follows:

Where the stem count is 1 the diameter should be entered into the 1 column under Stem Dia.
Where the stem count is up to 5 each stem dia. should be listed
Where the stem count exceeds 5, the mean stem diameter should be entered in the 1 column

*Either:*

**Stem Dia. (mm)**

Stem diameter(s) at 1.5m above ground level (see measurement system in BS5837:2012 Annex C), given in millimetres

*Where entered 1:*
Single measured stem diameter

*Where entered 2-5:*
Multiple measured stem diameters, listed per stem

*Where entered >5:*
For trees with more than five stems, diameter is listed as an estimated mean

Where the diameter entry for trees with 1 or 2-5 stems appears in italics, this indicates that it was estimated by the surveyor (for example, due to the presence of ivy on the stem)

It is our practice to round up when estimating stem diameters

*Or:*

**Specimen Stem Dia.**

For trees assessed as groups or woodland, stem diameter in millimetres at 1.5m above ground level for 80 percentile member of TG or WG. Trees with larger diameters are identified on the TSP

*Or:*

**Mean Stem Dia.**

Mean stem diameter in millimetres above the basal flare of hedge or hedgerow component plants

*Either:*

**RPA Rad.**

Radius in metres of the notionally circular Root Protection Area

*Or:*

**Specimen RPA Rad.**

For trees assessed as groups or woodland, radius in metres of the notionally circular Root Protection Area based on specimen diameter for TG or WG 80 percentile tree

*Either:*

**RPA Area**

Conversion of RPA radius to an area, given in $m^2$, capped to a maximum of $707m^2$ (in line with BS5837:2012)

*Or:*

**Specimen RPA Area**

For trees assessed as groups or woodland, conversion of specimen RPA radius to an area, given in $m^2$, capped to a maximum of $707m^2$

**Note**
RPA for hedges or hedgerows is to be taken as 3m from the centreline, half the height or 2m beyond existing width, whichever is the greater

**Life Stage**

Life stage assessment according into:

| | |
|---|---|
| Y | Young |
| SM | Semi-mature |
| EM | Early mature |
| M | Mature |
| OM | Over-mature |

**Phys. Condition**

An assessment of the **physiological** condition (i.e. health/vitality) status of the tree summarised according to:

| | |
|---|---|
| **G**OOD | Generally in healthy condition |
| **F**AIR | Condition satisfactory though below mean species performance |
| **P**OOR | Tree in decline/retrenching |
| **D**EAD | Self explanatory |

**Structural condition & Notes**

Notes on the apparent structural integrity of the tree based on visual tree assessment, including notes on form, taper, forking habit, storm damage, decay fungi, pests, etc. plus other pertinent observations

## Management recommendations

Preliminary recommendations for intervention (e.g. tree surgery, felling, etc) in relation to existing context

Trees assessed as being in apparently immediately hazardous condition will be notified to the client separately as soon as practical. Where the recommendation is for further investigation, including removal of ivy and reinspection, the given retention span and quality/value grade (see below) should be treated as provisional

**Notes**
This is **not** intended to comprise a specification for tree work: further advice should be sought prior to implementation

Change in land use (target value) requires further assessment

**Ret. Span**

Estimated remaining retention span based on species, condition & context divided into the following bands (relates to quality and value grade achievable as stated):

| *Years* | *Best QV grade* |
|---|---|
| <10 | U |
| 10+ | C |
| 20+ | B |
| >40 | A |

**QV Grade**

Quality & Value grade classification according to BS5837:2012 (see attached extract from BS5837:2012 'Table 1 - Cascade Chart for Tree Quality Assessment') –

| *Grade* | *Summary meaning* | *Ident. colour spot on TSP* |
|---|---|---|
| **U** | Trees that are unretainable in viable condition | Dark red |
| **A** | High quality & value and consequent high retention priority | Light green |
| **B** | Moderate quality and value (moderate priority for retention) | Mid-blue |
| **C** | Low quality and value (generally considered to be sacrificial) | Grey |

**Note**
Trees present which we consider to be **exceptional** specimens are identified by the suffix * after the A grade, e.g. A1*

**Proposal**

This column identifies:

1. Pre-planning (Arboricultural Stages 1, Tree Survey, & 2, Design):
   JFL's initial view of a defensible tree retention / removal balance
2. Planning submission (Arboricultural Stage 3):
   The actual tree retention / removal balance as proposed

The following codes are used:

| | |
|---|---|
| RET | 1. Trees preferably retained<br>2. Trees that would be retained |
| PRET | *For tree groups (TG), woodlands (WG) & hedgerows (HR)* – signifies partial retention (see below) |
| REM | 1. Trees defensibly removed to facilitate development<br>2. Trees that would be removed |
| U | Trees identified to be unsuitable for retention |

**No. of trees retained**

*For tree groups only*
Number of trees retained out of the total recorded for the group. Outcomes are as follows:

| | |
|---|---|
| Survey grade U | Number of trees for retention defaults to 0 (can be amended by manual override) |
| Proposal code RET | Number of trees for retention defaults to total from *Tree Count* data field |
| Proposal code PRET | No. of trees for retention requires manual input following interrogation of relevant plans |
| Proposal code REM | Number of trees for retention defaults to 0 |

**Trees retained %**

*For tree groups only*
Percentage of pre-existing TG tree count that would be retained, based on an auto-sum derived from inputs into the preceding column

**Area retained $m^2$**

*For woodlands only*
Area, in square metres, of woodland (WG) proposed for retention. Outcomes are as follows:

| | |
|---|---|
| Survey grade U | Area for retention defaults to 0 (can be amended by manual override) |
| Proposal code RET | Area for retention defaults to existing area |
| Proposal code PRET | Area for retention requires manual input following interrogation of relevant plans |
| Proposal code REM | Area for retention defaults to 0 |

**Area retained %**

*For woodlands only*
Percentage of pre-existing WG area that would be retained, based on an auto-sum derived from inputs into the preceding column

**Length retained m**

*For hedgerows only*
Length, in metres, of hedgerow (HR) proposed for retention. Outcomes are as follows:

| | |
|---|---|
| Survey grade U | Length for retention defaults to 0 (can be amended by manual override) |
| Proposal code RET | Length for retention defaults to existing length |
| Proposal code PRET | Length for retention requires manual input following interrogation of relevant plans |
| Proposal code REM | Length for retention defaults to 0 |

**Length retained %**

*For hedgerows only*
Percentage of pre-existing HR length that would be retained, based on an auto-sum derived from inputs into the preceding column

## BS5837:2012 Table 1 – Cascade chart for tree quality assessment

| Category and definition | Criteria (including subcategories where appropriate) | | | Identification on plan |
|---|---|---|---|---|
| **Trees unsuitable for retention** (see Note) | | | | |
| **Category U**<br>Those in such a condition that they cannot realistically be retained as living trees in the context of the current land use for longer than 10 years | • Trees that have a serious, irremediable, structural defect, such that their early loss is expected due to collapse, including those that will become unviable after removal of other category U trees (e.g. where, for whatever reason, the loss of companion shelter cannot be mitigated by pruning)<br>• Trees that are dead or are showing signs of significant, immediate, and irreversible overall decline<br>• Trees infected with pathogens of significance to the health and/or safety of other trees nearby, or very low quality trees suppressing adjacent trees of better quality<br>*NOTE Category U trees can have existing or potential conservation value which it might be desirable to preserve; see [BS5837:2012]* ***4.5.7****.* | | | |
| | **1 Mainly arboricultural qualities** | **2 Mainly landscape qualities** | **3 Mainly cultural values, including conservation** | |
| **Trees to be considered for retention** | | | | |
| **Category A**<br>**Trees of high quality** with an estimated remaining life expectancy of at least 40 years | Trees that are particularly good examples of their species, especially if rare or unusual; or those that are essential components of groups or formal or semi-formal arboricultural features (e.g. the dominant and/or principal trees within an avenue) | Trees, groups or woodlands of particular visual importance as arboricultural and/or landscape features | Trees, groups or woodlands of significant conservation, historical, commemorative or other value (e.g. veteran trees or wood-pasture) | |
| **Category B**<br>**Trees of moderate quality** with an estimated remaining life expectancy of at least 20 years | Trees that might be included in category A, but are downgraded because of impaired condition (e.g. presence of significant though remediable defects, including unsympathetic past management and storm damage), such that they are unlikely to be suitable for retention for beyond 40 years; or trees lacking the special quality necessary to merit the category A designation | Trees present in numbers, usually growing as groups or woodlands, such that they attract a higher collective rating than they might as individuals; or trees occurring as collectives but situated so as to make little visual contribution to the wider locality | Trees with material conservation or other cultural value | |
| **Category C**<br>**Trees of low quality** with an estimated remaining life expectancy of at least 10 years, or young trees with a stem diameter below 150 mm | Unremarkable trees of very limited merit or such impaired condition that they do not qualify in higher categories | Trees present in groups or woodlands, but without this conferring on them significantly greater collective landscape value; and/or trees offering low or only temporary/transient landscape benefits | Trees with no material conservation or other cultural value | |

**FLAC Note**

The original contents of the column *Identification on plan* have been replaced by FLAC in the version above; spot colours to RGB codes given in BS5837:2012 Table 2

# Recognition of Ancient, Veteran & Notable Trees –
# ***R A V E N***

*The only Appeal-validated field recognition system for Irreplaceable Habitat trees*

## Step One—Size Assessment

**Tree has very large girth for species**
*Note—pollarding & senescence reduce stem increment: girth may be deceptive – assess stem girth relationship with life-stage accordingly*

Refer to *Ancient and other veteran trees: further guidance on management* (Lonsdale, ATF 2013) at Fig. 1.3: *Chart of girth in relation to age and developmental classification of trees*

IF GIRTH NOT VERY LARGE FOR SPECIES, STOP HERE!

## Step Two—Additional Primary Features

**At least one of the following should be present, or refer to Step Three**

- ☐ Extensive decay, especially brown rot or exposed stem heartwood in relevant species
- ☐ Extensive hollowing
- ☐ Crown senescence
- ☐ Retrenchment

## Step Three—Secondary Features

**If no additional Primary Feature is present, tree should have at least four Secondary Features**

- ☐ Large quantity of dead wood in crown, especially where large-sized
- ☐ Major storm damage/ breakout wounds
- ☐ Habitat spaces: decay holes and/ or crevices/ branch splits sheltered from direct rainfall
- ☐ Aerial rooting
- ☐ Sap run/ slime flux
- ☐ Water pool
- ☐ Bark loss inc. due to lightning strike
- ☐ Fungi
- ☐ Other epiphytic plants, including significant presence of lichens

## Step Four – Identification Guide

☐ **ANCIENT**
Veteran tree with extremely large girth: age likely > 50% of estimated species maximum
*E.g. pedunculate oak, 2m stem dia, average site: ca. 460 years old, ca. 50% of species max*

☐ **VETERAN**
Very large girth for species and qualifies under either Step Two or Step Three

☐ **NOTABLE**
Very large girth for species but does not qualify under either Step Two or Step Three

IF A TARGET IS PRESENT, ASSESS RISK USING *THREATS*

© Julian Forbes-Laird 2018

FLAC

RAVEN - *Recognition of Ancient, Veteran & Notable trees*

Guide to column headings

**Tree No.** Refer to accompanying plan
**Species** Listed by common name
**Form** Key factors that influence significance of stem size and age estimation
**Pollard** Whether the tree bears a pollard form, even if now long grown out
**Relic** Tree assessed as bearing <75% of former maximum crown volume

**Required primary feature** Tree must be large relative to others of its kind to qualify for assessment (or evidence retarded increment); refer to Lonsdale 2013
**Additional primary features** Features of principal importance for identifying A/V trees. In each case, feature should be present significantly
**Secondary features** Less important though still valuable features that aid identification, especially where present in numbers
**Extensive decay** Exposed decay areas should exceed 400cm2
**Exposed HW** HW refers to heartwood; applicable to relevant species only

**DW>150mm dia** Dead wood present in the crown with diameter over 150mm
**Maj. Storm damage** Breakout wounds or broken spars exceeding 30cm dia
**Dry habitat space** Potential for faunal use where not subject to rain entry
**Water pool** Offers niche habitat for specialist inverts, even where transient
**Signif. Bark loss/ LS** Bark loss exceeding 400cm2. LS refers to lightning strike
**Notable fungi** Refers to species with known associations to old-growth trees
**Other epiphytic plants** Should be either rare or present in significant quantity

**Age estimate** Computed using FC White Method, form & senescence weighting added
**Ancient** Trees beyond 50% of species maximum life expectancy
**Veteran** Trees with Required/ Primary or Secondary features as listed, and age >25% of species maximum life expectancy
**Notable** Trees that are large and/ or old for species, but which lack qualifying features
**Non-special** All other trees

*Note: This assessment reports findings on identified candidate A-V-N trees within flac's study area: refer to accompanying indicative plan of tree locations*

| Tree no. | Species | Form | | REQUIRED PRIMARY FEATURE | *Either:* ADDITIONAL PRIMARY FEATURES - at least one of | | | | | | *Or:* SECONDARY FEATURES - at least four of | | | | | | | | | | | AGE ESTIMATE | | RAVEN ASSESSMENT | | | | NOTES |
|---|---|---|---|---|---|---|---|---|---|---|---|---|---|---|---|---|---|---|---|---|---|---|---|---|---|---|---|
| | | **Pollard** | **Relic** | **Large stem dia.** | **Extensive decay** | | | **Hollowing** | **Senescence** | **Retrenchment** | **DW>150mm dia** | **Maj. Storm Damage** | **Dry habitat space** | **Aerial roots** | **Sap run/ slime flux** | **Water pool** | **Signif. bark loss/ LS** | **Fungi** | | **Other epiphytic plants** | | | **Years** | **Origin** | **Ancient** | **Veteran** | **Notable** | **Non-special** | |
| | | | | (mm) | Brown rot | Exposed HW | Other | | | | | | | | | | | Notable | Other | Lichens | Ferns | Other | | | | | | | |
| 9032 | Pedunculate oak | | | 1280 | X | | | | X | X | X | X | | | | | | | X | | | | 218 | 1804 | | X | | | Fungus in leaf litter identified as Ganoderma resinaceum |
| 9033 | Pedunculate oak | X | | 1070 | | | | | | | | | | | | | | | X | | | | 167 | 1855 | | | X | | Remnant Ganoderma fruiting body previously seen in leaf litter |

SHINFIELD LOCAL CENTRE : TREE SURVEY DATA TABLE

Data for individual trees

| FLAC Ref. No. | TPO Ref | Species | Ht. | Crown Spread (m) | | | | Ht. 1st Br. | Ht. Can. | Stem Count | Stem Dia. (mm) | | | | | RPA Rad. | RPA Area | Life Stage | Phys. Condition | Structural condition & Notes | Management recommendations | Ret. Span | QV Grade | Proposal |
|---|---|---|---|---|---|---|---|---|---|---|---|---|---|---|---|---|---|---|---|---|---|---|---|---|
| | | | (m) | N | S | W | E | (m) | (m) | | 1 / mean | 2 | 3 | 4 | 5 | (m) | (m2) | Y-SM-EM-M-OM | G-F-P-D | | | <10, 10+ 20+, >40 | U-A-B-C | |
| 9031 | | Small leaved lime | 9 | 4 | 5 | 5 | 4 | 2 W | 2 | 1 | 380 | | | | | 4.56 | 65 | EM | F | Slight stem incline to south. Co-dominant union from 1.6 metres with bark inclusion, typical form and structure for the species. Satisfactory overall condition currently. | No action required at time of survey. | 20+ | B1 | RET |
| 9032 | | Pedunculate oak | 26 | 10 | 10 | 8.7 | 10 | 6 N | 3 | 1 | 1280 | | | | | 15.00 | 707 | V | F | Veteran tree (see RAVEN). Remnant *Ganoderma resinaceum* fruiting brackets observed in leaf litter at east of stem and past attachment points at 0.3 metres east with associated bark necrosis. Crown retrenchment and senescence with die-back in upper crown, fair lower vitality. Moderate to large sized dead wood present. Stub on south-west side at 4 metres from major past limb failure exposing brown rot decay. Potential for further limb failures. Residential housing 10 metres to north and footpath beneath. | Reduce height and spread by 3m - 5m back to lower crown developing with good vitality. Remove or shorten dead wood which has the potential to land on the footpath or in the residential area to the north. Retain robust dead wood for its ecological value. Stack removed dead wood close to tree's base to its north. Work to be undertaken following pre-start meeting between FLAC and contractors | >40 | A3 | RET |
| 9033 | | Pedunculate oak | 15.5 | 8.8 | 10 | 10 | 9.5 | 1.8 E | 2 | 1 | 1070 | | | | | 12.84 | 518 | M | G | Notable specimen (see RAVEN). Remnant Ganoderma fruiting brackets previously observed in leaf litter at east of stem. Occasional moderate-sized dead wood scattered through crown, but none obviously so over footpath. Some past lower crown damage: Limb stub on south-west side at 4 metres after past lower limb failure exposing heartwood decay; Branch at 3 metres above ground level is structurally compromised by decay and past fractures. Described branch features plus woodpecker holes provide habitat spaces in crown structure. Residential housing 10 metres to north and footpath beneath. Stout lower stem with pollard like form but not displaying signs of past management. Attractive low domed crown form. | Reduce length of large branch on north side at 3m above ground level with an open fracture, by approximately 2m - 3m. | >40 | A1 | RET |

Data for trees assessed as groups (TG)

| FLAC Ref. No. | TPO Ref | Species | Tree Count | Ht. (m) | MRCS (m) | Ht. 1st Br. (m) | Ht. Can. (m) | Specimen Stem Dia. (mm) | Specimen RPA Rad. (m) | Specimen RPA Area (m2) | Life Stage Y-SM-EM-M-OM | Phys. Condition G-F-P-D | Structural condition & Notes | Management recommendations | Ret. Span <10, 10+ 20+, >40 | QV Grade U-A-B-C | Proposal | No. of trees retained | Trees retained % |
|---|---|---|---|---|---|---|---|---|---|---|---|---|---|---|---|---|---|---|---|
| TG1001 | | Elm | 40 | 9 | 3 | 1N | 1 | 200 | 2.40 | 18 | SM | P & D | Group of dead and dying elm trees caused by Dutch elm disease on both sides of path, but predominantly to the north | Remove dead and dying trees. | <10 | U | U | 0 | 0.0 |
| TG9050 | | Crack willow x1, Leyland cypress x5, hornbeam x1 | 7 | 10 | 3 | 1N | 1 | 260 | 3.12 | 31 | EM | F | Specimens appear to be third party off-site. All are scrubby and unremarkable. | No action required at time of survey. | 20+ | C2 | RET | 7 | 100.0 |
| TG9051 | | Silver birch x1, box elder, x1, Norway maple x1 | 3 | 10 | 3.5 | 3 S | 3 | 260 | 3.12 | 31 | EM | F | Off site tree group. No access. Remote inspection only. Dispersed linear tree group. Satisfactory overall condition. | No action required at time of survey. | 20+ | B2 | RET | 3 | 100.0 |
| TG9052 | | Lilac x1, Lawson cypress x1 | 2 | 7 | 3 | 1N | 1 | 200 | 2.40 | 18 | EM | F | Ownership uncertain, topo indicates off-site. Multi-stemmed lilac with small slender conifer at east. Scrubby but in satisfactory overall condition. | No action required at time of survey. | 20+ | C2 | RET | 2 | 100.0 |

## ARBORICULTURAL METHOD STATEMENT (AMS)

A) PRELIMINARY MATTERS

1. Prior to commencement of any work on site a tree protection meeting shall take place attended by the project arboriculturist and the construction contractor. The purpose of this meeting is to inform construction personnel on requirements for tree protection during the site's development as set out on this plan.

B) INSTALLATION OF PHYSICAL TREE PROTECTION MEASURES

2. Physical tree protection measures shall be installed prior to the commencement of any work on site, in line with the provisions of BS5837:2012, in the locations shown on this plan

Protective measures comprise:

i) FLAC Type 1 tree protection fencing (i.e. fencing to BS5837:2012 Figure 2, see Inset Sketch 1)
ii) All weather tree protection warning signs (see example on plan) shall be fixed to the TPF at 5-10m intervals (as appropriate to the run of the fence)

C) PROHIBITIONS & PRECAUTIONS

3. The tree protection fencing encloses the Construction Exclusion Zone. Within this zone the following activities are **strictly prohibited** during ground modelling and construction operations:

i) Excavation/ lowering of levels into rootable soil: removal of surface organic matter using hand tools is acceptable; scraping or reduction in depth of topsoil is not
ii) Raising of levels unless previously agreed
iv) Grubbing out of redundant buried structures
v) Operation, transit or storage of plant, and storage of materials, including demolition arisings
vi) Storage or handling of any chemical substance injurious to trees, including fuels, oils, lubricants and cement washings
vii) Installation of new services requiring trench excavation

4. The Construction Exclusion Zone shall be established site-wide and shall remain in place throughout, until the commencement of landscaping work. No elements of the physical tree protection shall be removed without prior attendance on site and written confirmation by the project arboriculturist.

5. The area for no-dig path construction (cyan hatching on this plan) shall be protected by TPF during the entirety of the primary construction process. The TPF shall be removed immediately prior to the commencement of the work to construct the no-dig path, to coincide with the landscaping phase after construction is completed. Particular care is required during this phase of work - refer to the Landscaping box at the bottom of this plan.

6. The recommendations of BS5837:2012 6.2.4.1 shall be strictly observed throughout the demolition and construction process

BS5837:2012 6.2.4.1

*Planning of site operations should take sufficient account of wide loads, tall loads and plant with booms, jibs and counterweights (including drilling rigs), in order that they can operate without coming contact with retained trees. Such contact can result in serious damage to the trees and might make their safe retention impossible. Consequently, any transit or traverse of plant in proximity to trees should be conducted under the supervision of a banksman, to ensure that adequate clearance from trees is maintained at all times. Access facilitation pruning should be undertaken where necessary to maintain this clearance*

Example alert & prohibition signage for attaching to tree protection fencing




**NOTE**

No work shall commence on site until a pre-commencement arboricultural meeting has taken place

## INSERT SKETCH 1

BS5837:2012 Figure 2 - Specification for tree protection fencing (TPF)

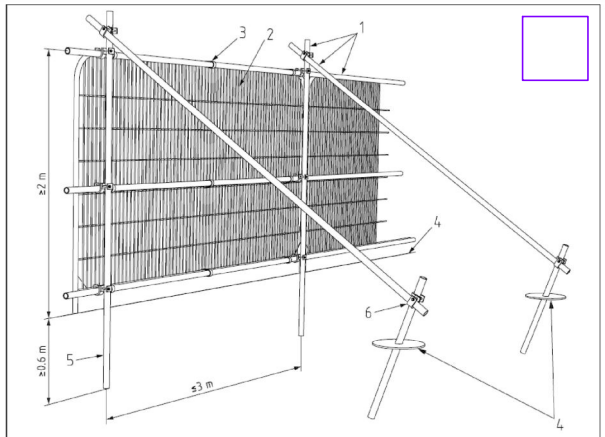


Key

1 Standard scaffold poles
2 Heavy gauge 2 m tall galvanized tube and welded mesh infill panels
3 Panels secured to uprights and cross-members with wire ties
4 Ground level
5 Uprights driven into the ground until secure (minimum depth 0.6 m)
6 Standard scaffold clamps

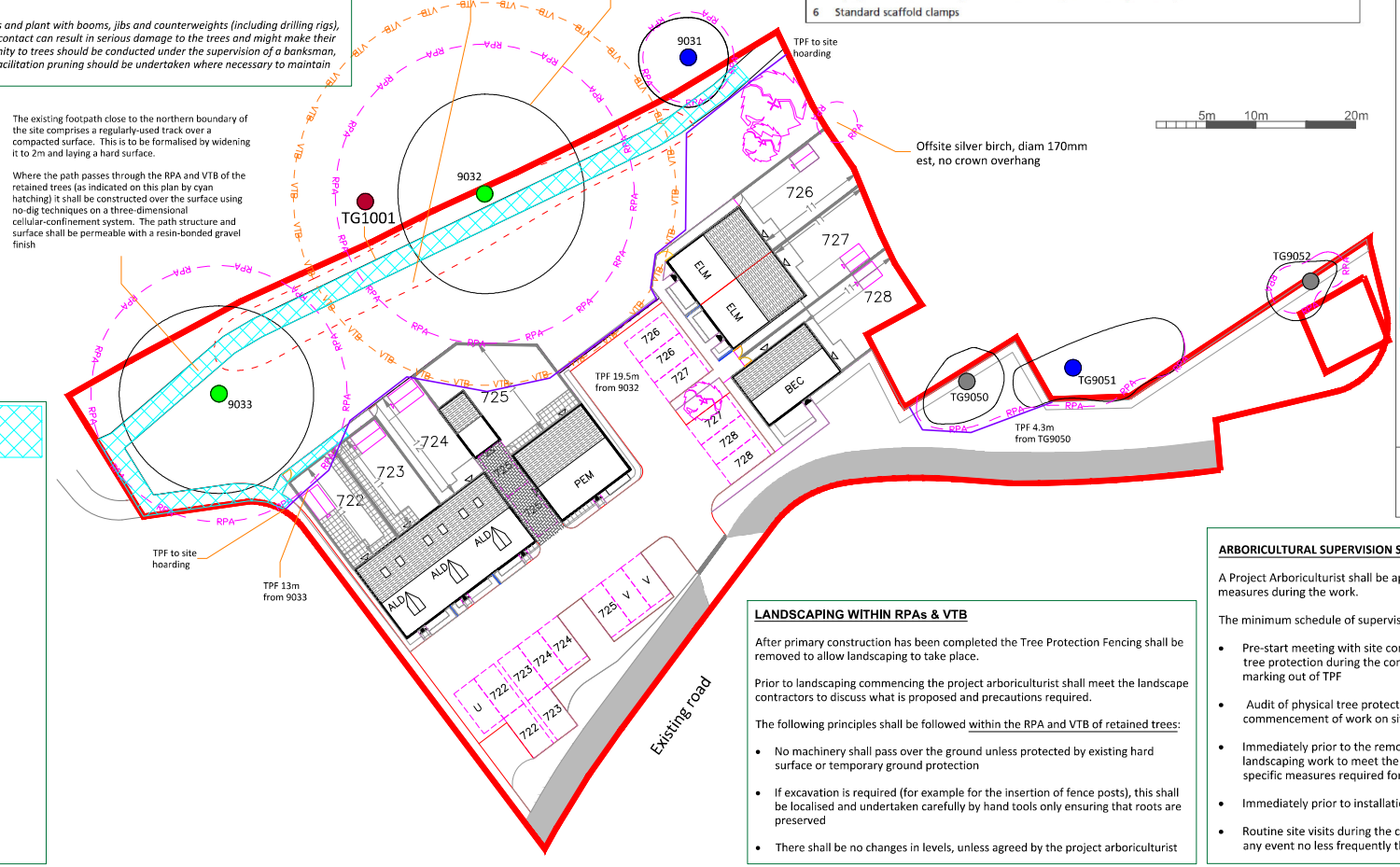


**Path construction using three-dimensional cellular confinement system**

In the position shown on this plan by the cyan hatching, construction shall be undertaken over the existing ground **without excavation** using a proprietary three-dimensional cellular confinement system such as Geosynthetics *cellweb*.

The system shall comprise:

- A porous geotextile membrane laid over the ground
- A three-dimensional cellular confinement system opened out and fixed in place over the membrane
- Edge constraints such as timber sleepers or pinned kerb stones placed on the existing surface
- Crushed, angular stone (20-40mm) with no-fines filled into the cells
- Permeable resin-bonded gravel wearing course over the aggregate to allow gaseous exchange and water infiltration

NOTES: There shall be **no construction access** over unprotected ground in the locations shown.

The work shall be undertaken during the landscaping phase (see separate box relating to landscaping) after all other construction has been completed

A DETAILED SITE-SPECIFIC CONSTRUCTION DESIGN SHALL BE PREPARED BY AN ENGINEER OR PRODUCT MANUFACTURER PRIOR TO INSTALLATION

**LANDSCAPING WITHIN RPAs & VTB**

After primary construction has been completed the Tree Protection Fencing shall be removed to allow landscaping to take place.

Prior to landscaping commencing the project arboriculturist shall meet the landscape contractors to discuss what is proposed and precautions required.

The following principles shall be followed within the RPA and VTB of retained trees:

- No machinery shall pass over the ground unless protected by existing hard surface or temporary ground protection
- If excavation is required (for example for the insertion of fence posts), this shall be localised and undertaken carefully by hand tools only ensuring that roots are preserved
- There shall be no changes in levels, unless agreed by the project arboriculturist

**ARBORICULTURAL SUPERVISION SCHEDULE**

A Project Arboriculturist shall be appointed to oversee tree protection measures during the work.

The minimum schedule of supervision is as follows:

- Pre-start meeting with site contractors to discuss requirements for tree protection during the construction process, including the marking out of TPF
- Audit of physical tree protection measures prior to the commencement of work on site
- Immediately prior to the removal of TPF and commencement of landscaping work to meet the landscape contractors and discuss specific measures required for tree protection during this phase
- Immediately prior to installation of no-dig path
- Routine site visits during the construction work as required, and in any event no less frequently than once every two months

FLAC

**Client**
Shinfield Consortium

**Instruction**
Shinfield Local Centre

**Instruction ref.**
28-1018

**Dwg title**
Tree Protection Plan

**Dwg no.**
28-1018.34

**Date**
20.10.22

**Scale**
1:250@A1

Quality & value grades:

Key

Category A High
Category B Moderate
Category C Low
Category U Unretainable

Trees to be retained
Trees to be removed
FLAC Type 1 tree protection fencing (see inset sketch 1)
Position of hard surface constructed using no-dig techniques. See insert sketch
Indicative tree root protection area
Veteran tree Buffer Zone (VTB)


Dendron House
Barford Road, Blunham
BEDFORD, MK44 3ND
T 44(0)1767 641648 // F 44(0)1767 660330
enquiries@flac.uk.com
www.flac.uk.com