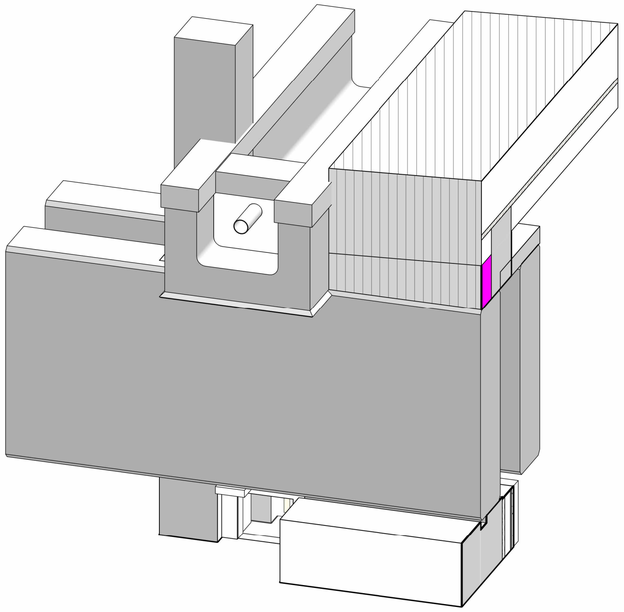

1 | 3d - Typical Gutter End Detail

This scenario represents a typical 'closed' gutter end with a spout for overflow this scenario happens at all gutters beneath pitched roofs

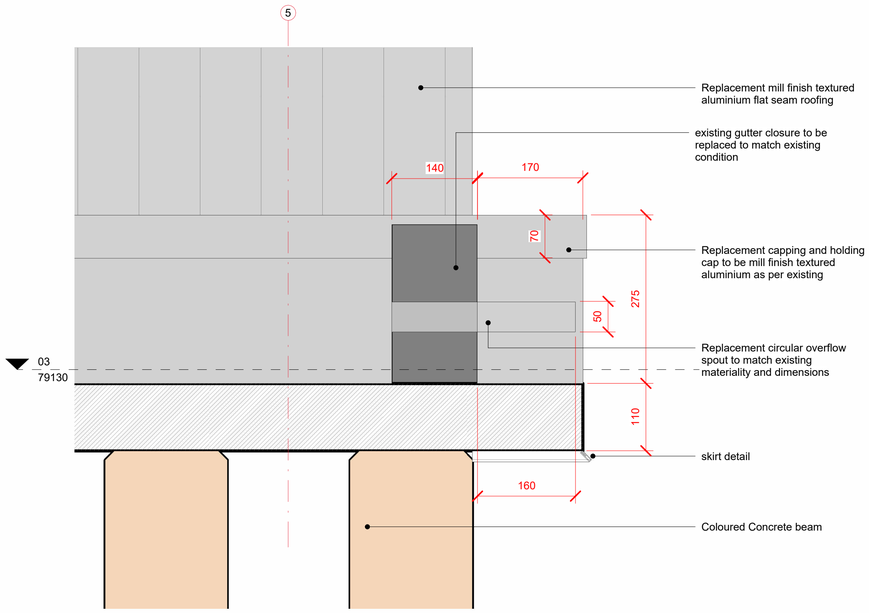

3 | Typical Gutter End Section A-A
1 : 5



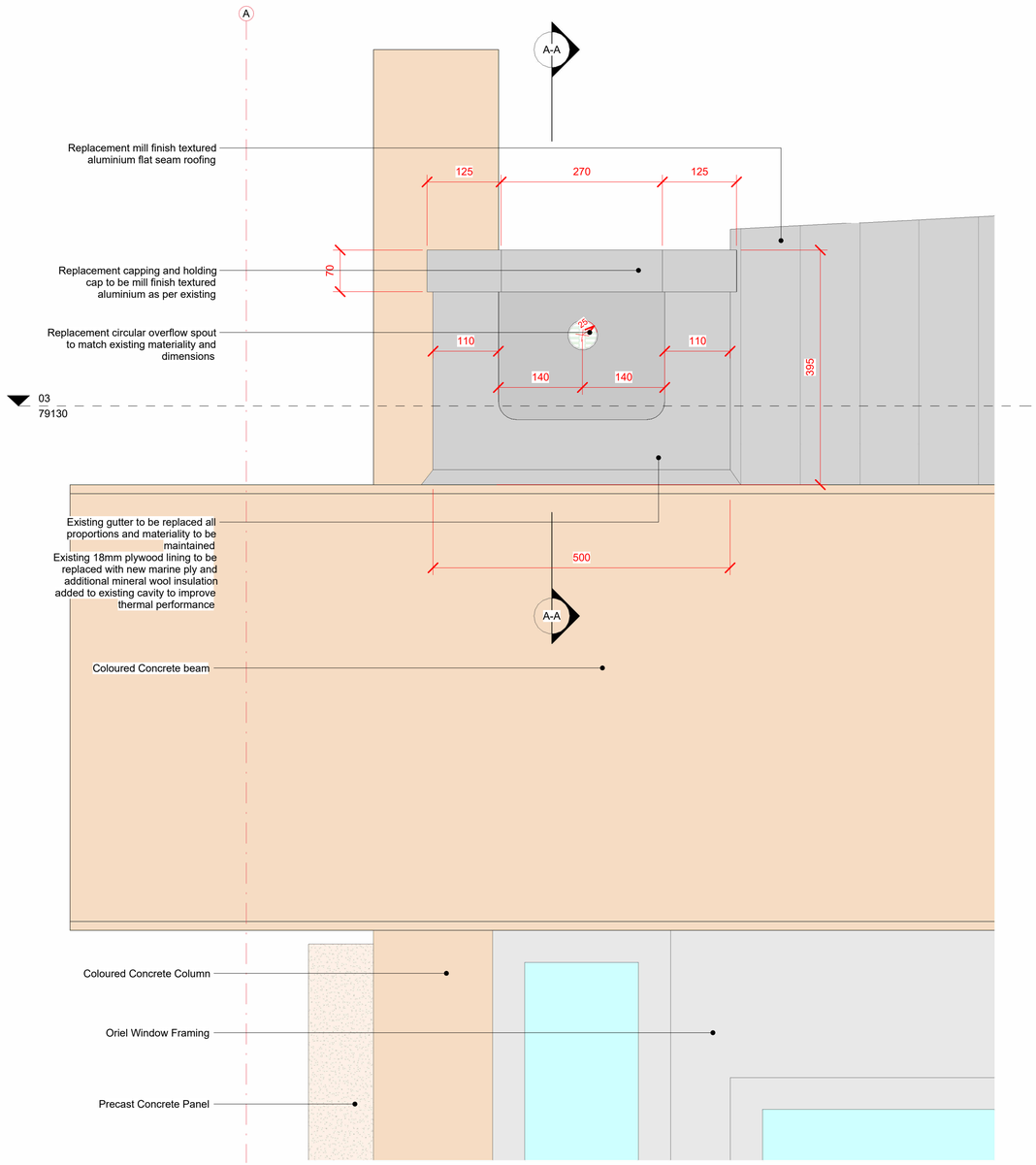

2 | Typical Gutter End Elevation
1 : 5

A1

SCALE

@ Copyright
Ayre Chamberlain Gaunt

NOTES:

DO NOT SCALE. USE FIGURED DIMENSIONS ONLY.

All dimensions to be checked on site.
Drawing to be read in conjunction with all relevent Architectural, Interiors, Structural, M&E, Drainage/ Public Health, Landscape and Civils drawings and specifcations. Any discrepancies between consultant's drawings to be reported to the Architect before any work commences.
The Contractor's attention is drawn to the Health & Safety matters identified in the Health & Safety plan as being potentially hazardous.
These items should not be considered as a full and final list.

The Work Package Contractor's normal Health & Safety obligations still apply when undertaking constructional operations both on and off site.

Ayre Chamberlain Gaunt take no responsibility for the location of legal boundaries indicated on this drawing and advise a separate drawing to be completed by specialist surveyor in order to establish exact boundaries.
DWG files provided for information only. Refer to PDF record.

The copyright of this drawing is held by Ayre Chamberlain Gaunt Ltd. Not to be used for any purpose without consent.

ACGARCHITECTS.CO.UK

Ayre Chamberlain Gaunt
Belvedere House
Basing View
Basingstoke
Hampshire, RG21 4HG

+44 (0)20 3909 5750
mail@acgarchitects.co.uk

AYRE CHAMBERLAIN GAUNT

CLIENT
University of Reading
MAIN CONTRACTOR

PROJECT
URS Building
University of Reading

DRAWING TITLE
Proposed 3D Gutter detail

LEGACY NUMBER
2360383-ACG-W033-ZZ-DR-A-36350

REV.	DATE	DESCRIPTION
P1	27.10.26	Planning Condition Discharge

DRWN	CHKD BY	APPD BY
MLA	AT	AT

DRAWING NO.
project code - originator - volume - level - type - role - number
W033-2360383-ACG-XX-ZZ-D-A-40370

STAGE	SUITABILITY	
RIBA stage	code	description
5	S3	Suitable for Review & Comment