APPLICATION NO:
A/2002/7918

LOCATION:
Land Adjoining Kwiksave The Square, Chalfont Way, Earley Reading.

APPLICANT:
McDonalds Restaurant C/O Hepher Dixon

PROPOSAL:
Proposed erection of internally illuminated building signs.

EARLIEST DATE FOR DECISION: **07/12/2002**

APPLICATION WILL HAVE EXPIRED ON:
27/12/2002

CASE OFFICER: **Angela Odell**

WOKINGHAM DISTRICT COUNCIL

TOWN AND COUNTRY PLANNING ACTS

Notification of Approval of Permission

McDonalds Restaurant
C/O Hepher Dixon
100 Temple Chambers
Temple Avenue
London
EC4X

Application Number: A/2002/7918

Parish: **EARLEY**

Location: **Land Adjoining Kwiksave, The Square, Chalfont Way, Earley, Reading.**

Proposal: **Proposed erection of internally illuminated building signs.**

The Wokingham District Council in pursuance of their powers under the above Acts and Regulations hereby **Approve Permission** for carrying out the above development in accordance with the application and the accompanying plans submitted to the Council subject to compliance with the following conditions, the reasons for which are specified hereunder.

Conditions

1. a) Any advertisements displayed, and any site used for the display of advertisements, shall be maintained in a clean and tidy condition to the reasonable satisfaction of the Local Planning Authority .

b) Any structure or hoarding erected or used principally for the purpose of displaying advertisements shall be maintained in a safe condition.

c) Where an advertisement is required under the Town and Country Planning (Control of Advertisements) Regulations to be removed, the removal shall be carried out to the reasonable satisfaction of the Local Planning Authority.

d) No advertisement is to be displayed without the permission of the owner of the site or any other person with an interest in the site entitled to grant permission.

e) No advertisement shall be sited or displayed so as to obscure or hinder the ready interpretation of, any road traffic sign, railway signal or aid to navigation by water or air, or so as otherwise to render hazardous the use of any highway, railway, waterway or aerodrome (civil or military).

2. The sign(s) shall not be illuminated other than while the premises are open for business.

3. The level of illumination of the signs shall not exceed 800 candelas.

Reasons

1. To comply with the Town and Country Planning (Control of Advertisements) Regulations 1992 (as amended).

2. In the interests of visual amenity.

3. In the interests of visual amenity.

Informatives

1. This approval is in respect of the signs on the south (front) and east side elevations only. The sign on the west side elevation has been deleted from the application by the agent's fax of 15 October 2003.

2. You are advised, in compliance with The Town and Country Planning (General Development Procedure) (England) (Amendment) Order 2000, that the following policies and/or proposals in the development plan are relevant to this decision:

Berkshire Structure Plan Policy EN1.

Loddon Area Local Plan Policy LBE10.

Deposit Draft Wokingham District Local Plan Policies WOS3 and WBE16.

T. G Watson

Trevor Watson
Development Control Manager
Date: 12/11/2003

Notice checked by:

If this notice grants permission to proceed with the proposal the applicant is reminded that it relates to planning permission only and does not constitute approval under any other legislation including Building Regulations.

LISTING FORM

Case officer: **Angela Odell** Application Number: **A/2002/7918**

Land Adjoining Kwiksave, The Square, Chalfont Way, Earley, Reading.

Proposed erection of internally illuminated building signs.

I wish this application to be listed should the officers recommendation be for: GRANT/REFUSAL and my reasons are:

Should the officers recommendation be in accordance with my views I am happy for the application to be determined under delegated powers. YES/NO

Signed: F Rolls Date: 4/12/02

Councillor F Rolls

I do not like the 2m facing the park
2) the one standing proud from the building.

The others are OK.
Can we talk

Wokingham District Council Tel: (0118) 974 6000 www.wokingham.gov.uk

POSITIVE ABOUT DISABLED PEOPLE
INVESTOR IN PEOPLE

Can we add a condition requiring them to collect litter within 3m of the site?

~~038~~ 16 Beaudrief Close
Lower Earley
Reading
RG6 4HY
25-11-2002

0118 9863917

PLANNING SERVICES	RPT
POL	TLS
DC NL	ENF
AFF	
DS	
26 NOV 2002	
COPIES TO WASTE/PARKS	ACK:

Dear Sir,

I wish to protest at the erection of signs at the new McDonalds at Chalfont Way, Lower Earley.

These signs are visually obtrusive on the approach to Lower Earley via Beeston Way & as such are a source of visual & aesthetic pollution.

Smaller, less obtrusive signs are required plus vegetative screening by large, established trees.

Litter pollution near the play park/tennis courts is also a major concern on environmental health grounds. Rats inhabit the existing dumps of black refuse sacks at the rear of the development.

Please respond within five working days to inform me of your actions.

Yours faithfully, P.D. Green.

Institution of Environmental Health Officers, *Survey to Local Authorities on the Incidence of Light Pollution*, 1994

Institution of Lighting Engineers (ILE), *Guidance Notes for the Reduction of Light Pollution*, 1994

Institution of Lighting Engineers, *Lighting and Crime*, 1994

Institution of Lighting Engineers, *Technical Report No.5: Brightness of Illuminated Advertisements*, 1995.

Institution of Lighting Engineers and Chartered Institution of Building Services Engineers, *Lighting the Environment: A Guide to Good Urban Lighting*, 1995

International Commission on Illumination (CIE) Publications on:

- Guidelines for Minimising Urban Sky Glow near Astronomical Observatories (No. 1) 1980;
- Guide to the Lighting of Exterior Working Areas (No. 68) 1986;
- Guide for the Lighting of Sports Events for Colour TV and Film Systems (No 83) 1989;
- Guide to the Lighting of Urban Areas (No. 92) 1992;
- Guide for Floodlighting (No. 94) 1993;
- Glare Evaluation System for use within Outdoor Sports and Area Lighting (No. 112) 1994;
- Recommendations for the Lighting of Roads for Motor and Pedestrian Traffic (No. 115) 1995;
- Urban Sky Glow, A worry for Astronomy (x8 Proceedings of a symposium of CIE TC 4.21) 1994

CIE Technical Report, *Guidelines for minimizing sky glow*, 4th DRAFT (TC 4.21) September, 1995

CIE Technical Report, *Guide on the limitation of the effects of obtrusive light from outdoor lighting installations*, 3rd DRAFT (TC 5.12) August, 1995

Jacoby R.E. and Pollard N.E., *The Lighting of Rural Roundabouts*, LITEC '94 Conference Paper, Institution of Lighting Engineers (ILE), 1994

Lothian Regional Council, *Standards for Development Roads*, LRC, 1992

New England Light Pollution Advisory Group (NELPAG), *From Internet*, 1995

Outen, A, Hertfordshire Environmental Records Centre, *The Possible Ecological Implications of Artificial Lighting*, 1995

Planning 1157, '*Special advertisement control areas put forward for abolition*', p28, 23 February 1996

Planning 1174, '*Council and conservationists combine to save advert regime*', p32, 21 June 1996

Pollard, N.E., *Lighting for Car Parks*, BPA Parking News, Issue 152, 1996, British Parking Association (BPA)

Pollard, N.E., *Floodlighting the Outdoor Environment*, 3rd European Conference on Energy- Efficient Lighting (IAEEL)

Pollard, N.E., *Sky-glow Conscious Lighting Design*, Lighting Research & Technology, Vol. 26, No.3, 1994, Chartered Institution of Building Services Engineers (CIBSE)

Public Health (Scotland) Act, 1897 Section 36 (1)

Royal Fine Art Commission *Lighten Our Darkness: Lighting our cities - successes, failures and opportunities*, 1994

Schreuder, Dr, *Quality Lighting-The Need to Cry over Spilled Milk* 3rd European Conference on Energy-Efficient Lighting, 1995 International Association for Energy-Efficient Lighting (IAEEL)

Sports Council, *Factfile 2: Floodlight for Sport*, 1993

Sports Council, *Guidance Notes: Floodlighting*, 1994

Sports Council, *Planning and Provision for Sport Factfile 2 Facilities*, 1994

The Scottish Office, *Roads, Bridges and Traffic in the Countryside*, 1992

UK Government *Sustainable Development: The UK Strategy*, HMSO CM 2426, 1994

Printed in the United Kingdom for The Stationery Office
N0024680 C15 7/97

can be conveniently divided into two main categories; those related to movement and direction, and those utilised commercially for advertising and image promotion. None can be wholly disassociated from the landscape or from the buildings and spaces in-between.

With the use of new materials, new light sources and advanced techniques an ever increasing variety of signs can quickly gain the observer's attention through the combined use of size, colour, and movement.

It is often required to describe or identify a certain type of illuminated sign and this task is most easily done if all electrically lighted signs are considered in terms of the method by which they are illuminated.

4.26.1 Luminous background signs

This category probably represents the greatest proportion of all illuminated signs, and generally comprises a translucent plastic or diffused glass fascia panel upon which translucent letters or designs may appear in contrasting colours, or opaque characters will appear in silhouette.

Signs of this type are achieved by backlighting an acrylic or glass panel which may be either internally pigmented, externally painted or preferentially opaque to permit selected areas of light to show. In the case of large areas of luminous panel, uniform brightness is an important factor. The quality of this effect over the desired portion of the sign face is directly proportional to the following:

- quality of pigmentation or paint film;
- the inter-reflectance characteristics of the sign enclosure;
- and the provision of the optimum clearance between the light sources, usually fluorescent lamps, and the sign face material.

The correct clearance will prevent 'hot spots' of source brightness appearing on the face of the sign.

Quality of both design and manufacture of an illuminated sign is important to ensure the best attraction value in both day and night environments, and the golden rule of visual effectiveness is simplicity.

Good contrast should be provided between the 'message' and its background. If the background brightness is too bright then you will never be able to read the sign. This may be achieved by differences in colour, or differences in brightness. Often the use of variations in colour will also achieve differences in perceived brightness. Many signs are required to have very light letters on a dark background.

4.26.2 Exposed tubular lamp signs

Illuminated letters and designs are seen against a non-illuminated background. Neon or cold cathode glass tubing may be arranged as exposed lamps, or designed to follow the contours of raised letters and designs.

Cold cathode or neon are usually associated with signs of this type. The letters or designs are constructed of gas-filled tubing which when subjected to high voltages becomes luminescent in the colour characteristics of the gas filling used, or of the fluorescent phosphors coating the inner wall. This form of signage is usually specially made to provide the user with a distinctive recognisable identification. Often lamp tubing can be concealed behind opaque letters of the same shape, the resultant visual effect being to silhouette the lettered facade sign.

4.26.3 Signs externally floodlit

This form of illumination is often appropriate for many large advertising hoardings. Acceptable uniformity over the entire sign area together with a strict avoidance of reflected glare are the main objectives.

delighted citizens and tourists the world over and have become an important source of revenue for their sponsors.

Son et lumière productions are nearly always associated with historic buildings or events. Typical of recent presentations being the Egyptian Pyramids at Gizeh, the Roman Forum, the Regent's Palace at Brighton and Greenwich Palace.

The objective is to utilise sound and light sequences to re-create an historical story through the stimulated imagination of the audience.

Son et lumière performances can be presented as a stage setting with the audience viewing from mainly one direction as in the theatre, or they may be staged within cathedrals, palaces or archaeological ruins where the audience is not restricted to one permanent place or direction of view.

Techniques of synchronisation and control have reached a refined and advanced level and son et lumière is now a contemporary art form that uses state of the art technology in electro-acoustics. The equipment range is fully automatic. The central control unit is designed to handle the synchro signals from multi-track tapes, some of which carry music, sound effects, voices, all of which could be mono, stereo and travelling sound. Other tracks provide command signals for the accurate control and co-ordination of the various light and sound circuits.

Generally light sources producing white light are utilised in luminaires equipped with adjustable shutters and louvres which also support colour filters or coloured front glasses to produce complex coloured lighting effects. Typical of these effects are the combinations of red/yellow to reproduce sunlight, and blue/green for clear moonlight.

Typical types of lighting are contained in the following list.

- General or basic floodlighting.
- Dynamic, effect or ambience lighting, which would be variable in direction, intensity and colour.
- Highlighting of the architecture.
- Accent lighting of the smaller features or details, often using specially designed projectors.
- Glancing or grazing light.
- Back, or contre-jour lighting.

Luminaires are often recessed into trenches which run parallel to the facades. In the daytime trenches can be closed and secured by hinged metal covers which totally conceal and protect the equipment from damage and the weather.

Son et lumière are very individual productions. When such a presentation is contemplated specialists should be consulted.

4.26 Illuminated signs and hoardings

Area, location, or task	Maintained illuminance (lux)	Notes
Externally illuminated signs		
Low district brightness	100	On sign.
High district brightness	500	On sign.

A sign communicates traffic information, advertises products and services, promotes brand names and identifies shops and stores. Illuminated signs

HEPHER DIXON
TOWN PLANNING CONSULTANTS

Mrs A. Odell
Head of Planning Services
Planning Services
Wokingham District Council
Civic Offices
Shute End
Wokingham
Berkshire RG40 1BN

PLEASE REPLY TO LONDON

JM/343B/N2848L
15th October 2003
By Fax & Post

Dear Ms Odell,

Application A/2002/7918
Proposed Erection of Internally Illuminated Building Signs at McDonalds, The Square, Chalfont Way, Lower Earley

Further to your letter of the 30th September 2003, I have since spoken to our client and confirm that they will agree to the requests of the Council, namely:

- Reduction of level of illumination from 1300 to 800 candelas.
- Removal of the illuminated sign on the west side of the building.

McDonald's signage contractor has assured us that this will be carried out within a maximum of 10 days.

I hope that this is satisfactory and look forward to receiving a positive consent for the advertisement application in due course. Please do not hesitate to contact me if I can be of further assistance.

Yours sincerely,

Jonathan Murch
Planning Assistant

c.c. Emma Weintroub, McDonalds Restaurants
Mark Lumbis, Project Solutions
Dipak Kotecha, Lewis and Hickey
Chris Potts, Hepher Dixon

100 Temple Chambers, Temple Avenue, London, EC4Y 0HP. Tel - 020 7353 0202. Fax - 020 7353 1818
62 High Street, Stony Stratford, Milton Keynes, MK11 1AQ. Tel - 01908 562 800. Fax - 01908 560 161
Temple Court, Cathedral Road, Cardiff, CF11 9HA. Tel - 029 20 786 623. Fax - 029 20 786 627
82 King Street, Manchester, M2 4WQ. Tel - 0161 935 8242. Fax - 0161 935 8001
E-mail - townplanning@hepherdixon.co.uk

Directors
Roger A Hepher BA MTP FRICS MRTPI
Peter G B Dixon MA MRICS MIHT
Christopher Potts BA MRTPI
Duncan N Parr BA DUPI DipTP FRGS MRTPI
Patrick M Grincell BSc MA MRICS MRTPI MIQ

HEPHER DIXON LTD. REGISTERED IN ENGLAND NO. 3701328 REGISTERED OFFICE: 62 HIGH STREET, STONY STRATFORD, MILTON KEYNES MK11 1AQ

02073531818
15/10/2003 17:23 02073531818 HEPHER DIXON LONDON PAGE 02/02

HEPHER DIXON
TOWN PLANNING CONSULTANTS

PLANNING SERVICES DEPT 73855
AMO
20 OCT 2003

Mrs A. Odell
Head of Planning Services
Planning Services
Wokingham District Council
Civic Offices
Shute End
Wokingham
Berkshire RG40 1BN

PLEASE REPLY TO LONDON

JM/343B/N2848L
15th October 2003
By Fax & Post

Dear Ms Odell,

Application A/2002/7918
Proposed Erection of Internally Illuminated Building Signs at McDonalds, The Square, Chalfont Way, Lower Earley

Further to your letter of the 30th September 2003, I have since spoken to our client and confirm that they will agree to the requests of the Council, namely:

- Reduction of level of illumination from 1300 to 800 candelas.
- Removal of the illuminated sign on the west side of the building.

McDonald's signage contractor has assured us that this will be carried out within a maximum of 10 days.

I hope that this is satisfactory and look forward to receiving a positive consent for the advertisement application in due course. Please do not hesitate to contact me if I can be of further assistance.

Yours sincerely,

Jonathan Murch
Planning Assistant

c.c. Emma Weintroub, McDonalds Restaurants
Mark Lumbis, Project Solutions
Dipak Kotecha, Lewis and Hickey
Chris Potts, Hepher Dixon

100 Temple Chambers, Temple Avenue, London, EC4Y 0HP, Tel - 020 7353 0202, Fax - 020 7353 1818
62 High Street, Stony Stratford, Milton Keynes, MK11 1AQ, Tel - 01908 562 800, Fax - 01908 560 161
Temple Court, Cathedral Road, Cardiff, CF11 9HA, Tel - 029 20 786 623, Fax - 029 20 786 627
82 King Street, Manchester, M2 4WQ, Tel - 0161 935 8242, Fax - 0161 935 8001
E-mail - townplanning@hepherdixon.co.uk

Directors
Roger A Hepher BA MTP FRICS MRTPI
Peter G B Dixon MA MRICS MIHT
Christopher Potts BA MRTPI
Duncan N Parr BA DUPI DipTP FRGS MRTPI
Patrick M Grincell BSc MA MRICS MRTPI MIQ
HEPHER DIXON LTD. REGISTERED IN ENGLAND NO. 3701328 REGISTERED OFFICE: 62 HIGH STREET, STONY STRATFORD, MILTON KEYNES MK11 1AQ

WORK SHEET FOR : Angela Odell

Application Number : A/2002/7918

Applicant : McDonalds Restaurant C/O Hepher Dixon.

Location : Land Adjoining Kwiksave, The Square, Chalfont Way, Earley, Reading.

Proposal : Proposed erection of internally illuminated building signs on front (south) and east side elevations.

Site Notice Displayed ? :	YES	NO	DATE

Date of Neighbour Notifications : .....

Date of Site Visit : 19.11.02

Date Registered : 01/11/2002

Earliest Date for Decision : 07/12/2002

Latest Consultation Date/Site Notice Expiry Date : 07/12/2002

This application will have expired on: 27/12/2002. You need to make a decision 1 day prior to this date for this application to count as determined in less than 8 weeks.

Consultation Responses : 1 letter of objection – signs are obtrusive and a source of visual and aesthetic pollution. Also comments re. Litter

• Earley T.C. : No objection.

Planning Issues :

Application Number: A/2002/7918

Appraisal :

see attached report.

Recomendation : Approval: ☑ **Refusal:** ☐
(tick appropriate box)

A/2002/7918 – Appraisal

Proposal
Is to erect internally illuminated signs (letters only) on the roof elevations of the building which is under construction (shell of building completed). Proposal is for a golden arch adjoined to 'cDonald's' sign on the front (south) elevation, and also for a golden arch on each of the two side elevations. The three golden arches would be 1.22m. high and the rest of the lettering in the 'McDonald's' sign would be white and 0.61m. high.
N.B. The 'golden arch is a yellow 'M'.
Agents' fax of 15.10.03 advises that the 'M' on the west side elevation facing the park will be removed and the level of illumination reduced from 1300 to 800 candellas.

Relevant Planning History
Duplicate applications A/2002/2169 & 2170 for the erection of signs on the roof of the building were approved on 4/01/01 at Committee (having been 'listed' by Councilor Fiona Rolls). These signs were similar to those now applied for, but the yellow arch was to be 0.83m high and other letters up to 0.465 m. high and with an extra 'M' on the front elevation in the lettering. Signs the same as those currently applied for were submitted as a minor amendment, but there appears to be no record of a reply by WDC to this.

Conditions included that the signs should not be illuminated except while the premises were open to business, and that the brightness was not to exceed that of illuminated signs on adjacent buildings.

Effect on the character and appearance of the area
The proposed signs need to be assessed in comparison to the signs that have been permitted, and on whether they would have an acceptable effect on the character and appearance of the area. Policy WBE16 covers outdoor advertising and states that only outdoor advertisements which are sympathetic in design to their surroundings in relation to amenity, including residential amenity and highway safety will be permitted.

Additional site visit after dark on 9.12.02 to view signs now installed and lit. As drive up Beeston Way and come to the roundabout with Rushey Way, the main sign on the front of the building is noticeable. However, as the sign is only slightly larger than that already approved, and the building is now smaller than that originally approved and about 3m. further back, consider it would be acceptable providing the level of illumination is reduced as proposed. The 'M' on the east side elevation facing The Square is considered acceptable as it faces onto the car park and other retails units. The 'M' facing the park on the west side elevation is proposed to be removed form the application. (The current application has been submitted only because retrospective alterations to the building have also been applied for under a separate application. The main change is a reduction in length of about 1m. and increase in parking area.)

Effect on neighbouring properties

The only sign which has a significant effect on residential properties is the west facing sign that is to be removed. Therefore consider the effect on neighbouring properties is acceptable.

Recommendation: conditional approval

N.B. Tth alteration

Application Number A/2002/7918
Conditions/Reasons for Refusal

No	Std Con	Std Reas	Non Std Conditions / Reasons for Refusal
~~1~~	~~C213~~	~~R213~~	
1	C213	R213	
2	C210	R210.	
3		R210	The level of illumination ~~shall not exceed~~ of the signs shall not exceed 800 candellas.
			Informative
~~1~~	1.	~~R2010~~	This permission is in respect of the signs on the south (front) and east side elevations only. The sign on the west side elevation has been deleted from the application by the agent's fax of 15.10.03.

If any of the consultee's have requested a copy of the decision notice please list them below;
Enforcement Officer.

Informative for approvals

N16

LODDON AREA LOCAL PLAN POLICIES: LBE10.

SOUTH-EAST AREA LOCAL PLAN POLICIES:

WOKINGHAM DISTRICT LOCAL PLAN POLICIES: WOS3, ~~LBE10~~ WBE16.

GREEN BELT LOCAL PLAN POLICIES:

BERKSHIRE STRUCTURE PLAN POLICIES: ENV

MINERALS LOCAL PLAN POLICIES:

RECOMMENDATION AND CONDITIONS/REASONS AGREED: _____
(Development Control Manager)

Date: 17th October 2003.

RECORD OF SITE VISIT

SITE ADDRESS: Land Adjoining Kwiksave The Square, Chalfont Way Earley Reading.

APPLICATION NUMBER: A/2002/7918

OFFICER: Angela Odell

DATE OF SITE VISIT: 19.11.02

1 SITE/STATUTORY NOTICE DISPLAYED ?

2. DESCRIPTION OF SURROUNDINGS Shops etc. in District Centre.

3. DESCRIPTION OF SITE/BUILDING Restaurant/Drive Thru under construction

4. RELATIONSHIP TO ADJOINING PROPERTIES Retail outlets – Kwiksave etc – adjacent.

5. SITE CONSTRAINTS

TREES On edge of embankment.

ACCESS/PARKING In front of restaurant & adjacent joint parking area

LEVELS Flat but steep embankment to Rushey Way.

BOUNDARY TREATMENT —

OTHERS

Tel. 0118 974 6445 (Direct Line)
E-mail: Angela.Odell@wokingham.gov.uk
Date. 30 September, 2003
My ref. AO/2002/7918
Your ref. JM/343B/M7001L

Hepher Dixon
100 Temple Chambers
Temple Avenue
LONDON EC4Y 0HP

Environmental Services Department
Planning Services
P.O. Box 157
Shute End, Wokingham
Berkshire RG40 1WR
Tel: (0118) 974 6000
Fax: (0118) 974 6484
Minicom No: (0118) 977 8909
DX: 33506 – Wokingham

Dear Mr Murch

APPLICATION A/2002/7918
PROPOSED ERECTION OF INTERNALY ILLUMINATED BUILIDNG SIGNS AT MCDONALDS, THE SQUARE, CHALFONT WAY, LOWER EARLEY

Please confirm your clients will agree to the following:

1. Reduction of level of illumination from 1300 to 800 candelas
2. Removal of the illuminated sign on the west side of the building.

It is important that the above confirmation is submitted to me within two weeks, i.e. by 15 October, to ensure that the application is not determined on the basis of the current unsatisfactory submission. Should you have any difficulty in meeting this deadline or should you wish to discuss the above please contact me immediately.

Yours sincerely

Ao

MRS A ODELL
Planning Officer

1894

WOKINGHAM DISTRICT COUNCIL
PLANNING DEPARTMENT

Record of Meeting: ☐
Present:

Record of Telephone Call: ✓
Conversation with:
Cllr Fiona Rolls

Date: 5.12.02
Time: am
Place:
(if applicable)

NOTES re: 7918 & 7919 – McDonalds Signs

She explained she is concerned about the signs on the side of the building facing the Park (i.e. the 'M' on W side). and wants it removed.

re: 7919 – she explained she is concerned about the free-standing McDonalds sign nearest to Rushey Way (to be illuminated). I explained that it was already installed and I thought it would be O.K. She said she would trust my judgement on this.

Copies to:
Action:

Application/File No:

Angela Odell

To: Dave Halley
Subject: Planning Application A/2002/7918

Dear Dave

In your capacity as an expert on lighting! please can you assist me. The above (retrospective) application is to retain the internally illuminated 'McDonalds' sign on the building at Chalfont Square, Lower Earley. Having seen it lit up in the dark I consider it too bright. The agent has advised me that the intensilty of the lighting is 1300 candellas (which he has been advised equates to 120.81 lux). In order to reduce the intensity, please can you suggest a level of illumination.

Thanks

Angi

Tel. 0118 974 6445 (Direct Line)
E-mail: Angela.Odell@wokingham.gov.uk
Date. 6 February, 2003
My ref. AO/A/2002/7919
Your ref. JM/343B/M7001L

Hepher Dixon
100 Temple Chambers
Temple Avenue
LONDON EC4Y 0HP

Environmental Services Department
Planning Services
P.O. Box 157
Shute End, Wokingham
Berkshire RG40 1WR
Tel: (0118) 974 6000
Fax: (0118) 974 6484
Minicom No: (0118) 977 8909
DX: 33506 – Wokingham

Dear Mr Murch

APPLICATION A/2002/7918
PROPOSED ERECTION OF INTERNALLY ILLUMINATED SIGNS ON BUILIDNG AT MCDONALDS, THE SQUARE, CHALFONT WAY, LOWER EARLEY

I refer to the above application, and to our telephone discussion following my letter to you of 12 December 2002. I am concerned that I have received no further response from you regarding the size of the signs and the intensity of lighting. Please contact me to discuss the matter. If I do not hear from you by 14 February, I advise you that we intend to determine the application as submitted.

Yours sincerely

MRS A ODELL
Planning Officer

FROM: Angela Odell

DATE: 13 November 2002

DELEGATED

EARLEY TOWN CONSULTATION SHEET

Application Number: A/2002/7918

Proposal: Proposed erection of internally illuminated building signs..

Site Address: Land Adjoining Kwiksave, The Square, Chalfont Way, Earley, Reading.

Applicant: McDonalds Restaurant C/O Hepher Dixon.

Your observations are required in respect of this application **by 07/12/2002** .

NO OBJECTION

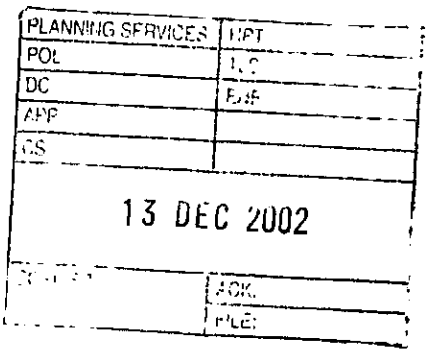

SIGNED: _____

DATE: 12 DEC 2002

Clerk To Earley Parish/Town Council.

Tel. 0118 974 6445 (Direct Line)
E-mail: Angela.Odell@wokingham.gov.uk
Date. 12 December, 2002
My ref. AO/A/2002/7919
Your ref. JM/343B/M7001L

Hepher Dixon
100 Temple Chambers
Temple Avenue
LONDON EC4Y 0HP

Environmental Services Department
Planning Services
P.O. Box 157
Shute End, Wokingham
Berkshire RG40 1WR
Tel: (0118) 974 6000
Fax: (0118) 974 6484
Minicom No: (0118) 977 8909
DX: 33506 – Wokingham

Dear Mr Murch

APPLICATION A/2002/7918
PROPOSED ERECTION OF INTERNALLY ILLUMINATED SIGNS ON BUILIDNG AT MCDONALDS, THE SQUARE, CHALFONT WAY, LOWER ERALEY

I refer to the above application. I note the signs have been installed and are lit when the restaurant is open. I have therefore been able to view the signs when lit up during darkness. Firstly, I have compared the signs with those already approved under applications A/2000/2169 & 2170 (duplicate). These signs show that the yellow arch was to be 0.83m high and other letters up to 0.465 m. high and with an extra 'M' on the front elevation in the lettering. However, the current signs are the three golden arches 1.22m. high and the rest of the lettering in the 'cDonald's' sign is up to 0.61m. high. The signs installed are therefore significantly larger than the approved signs. I also noticed that they are very bright, and appear to be significantly brighter than the existing signs on other buildings at Kwiksave and Iceland nearby. The main front sign is very noticeable and obtrusive when viewing it coming up to the roundabout of Rushey Way with Beeston Way. I therefore consider the signs as applied for are unacceptable. Please therefore submit revised plans showing alternative signs to be no larger than those already approved, and with a significantly power level of illumination (to comply with condition 5 of consents A/2002/7918).

It is important that the revised plans are submitted to me by 30 December, to ensure that the application is not determined on the basis of the current unsatisfactory submission. Should you have any difficulty in meeting this deadline or should you wish to discuss the revised plans please contact me immediately.

Yours sincerely

Ao.

MRS A ODELL
Planning Officer

LISTING FORM

Case officer: **Angela Odell** Application Number: **A/2002/7918**

Land Adjoining Kwiksave, The Square, Chalfont Way, Earley, Reading.

Proposed erection of internally illuminated building signs.

I wish this application to be listed should the officers recommendation be for: GRANT/REFUSAL and my reasons are:

Should the officers recommendation be in accordance with my views I am happy for the application to be determined under delegated powers. YES/NO

Signed: [signature] Date: 4/12/02

Councillor F Rolls

I do not like 1) the OK facing the park
2) the one standing proud from the building.

The others are OK.
Can we talk

Wokingham District Council Tel: (0118) 974 6000 www.wokingham.gov.uk

Can we add a condition requiring them to collect litter within 300m of the site?

~~0158~~

16 Beaudrief Close
Lower Earley
Reading
RG6 4HY

0118 9863917

PLANNING SERVICES | HPT
FOL | TLS
DC NL | ENF
APP
CS
26 NOV 2002
COPIES TO WASTE/PARKS | ACK:

25-11-2002

Dear Sir,

I wish to protest at the erection of signs at the new McDonalds at Chalfont Way, Lower Earley.

These signs are visually obtrusive on the approach to Lower Earley via Beeston Way & as such are a source of visual & aesthetic pollution.

Smaller, less obtrusive signs are required plus vegetative screening by large, established trees.

Litter pollution near the play park/tennis courts is also a major concern on environmental health grounds. Rats inhabit the existing dumps of black refuse sacks at the rear of the development.

Please respond within five working days to inform me of your actions.

Yours faithfully, P.D. Green.

Angela Odell

From: Adam Coggins
Sent: 26 November 2002 09:01
To: Angela Odell
Subject: RE: A/2002/7918 & 7919 - signs for McDonalds

Angela,

I can confirm that the highway authority has no objection to the applications: A/2002/7918 & 7919.

Adam

-----Original Message-----
From: Angela Odell
Sent: Tuesday, November 26, 2002 8:41 AM
To: Adam Coggins
Subject: A/2002/7918 & 7919 - signs for McDonalds

Please can you put your 'no objection' in writing to these applications

Thanks

Angi

Application Number : A/2002/7918	Map No : 57/65
Case Officer : AO.	Site Area : 0·16
Valid Date : 1.11.02	Received Date: 01/11/2002

Level : Delegated Application

Description : Proposed erection of internally illuminated building signs.

Location : Land Adjoining Kwiksave, The Square, Chalfont Way, Earley, Reading.

Parish : EA **Ward : RED** 13.11.02 B.

Applicant : McDonalds Restaurant C/O Hepher Dixon.

Fee Required: £60 **Fee Received: £60** (2)

Additional: ..... or Refund: .....

Enforcement Section to be notified ☐ (tick if required)

Additional information required for validation;

REASON	NOTES	DATE REQ	DATE RECD
LOCATION PLANS			
BLOCK PLANS	Block plan required to show position of signs on site - not indicated on drawing 4780/109/001 which is with application /1919.	requested 11/11 to follow.	
FORMS UNSIGNED			
S.66 MISSING/INCORRECT/ UNSIGNED			
ELEVATION PLANS			
FLOOR PLANS			
NO SCALE OR SCALE IS IMPERIAL			
ENCROACHMENT LETTER REQUIRED			
OTHER			

Is the site in a Conservation Area: ☐ Yes ☐ No If "Yes" which one _____

Is the site a Listed Building: ☐ Yes ☐ No

Is a Statutory Advertisement required: ☐ Yes ☐ No

INTERNAL CONSULTATIONS 13.11.02 B.

Building Control

Heritage (Harold Sanders)

Landscape

Trees

Environmental Health

Housing

Leisure & Cultural Services

Public Rights of Way Officer

Property

Policy & Plans

Joint Strategic Planning Unit

Archaeological Officer (BABTIE)

Education

Social Services

Highways

EXTERNAL CONSULTATIONS

Adjacent DPA : _____

Adjacent Parish : _____

SEB

British Gas

Oil pipeline

Transco

Environment Agency

Railtrack

Police Arch Officer

HERITAGE BODIES

Victorian Society
The Georgian Group
Ancient Monuments Society
Council for British Arch
RCHME
NRPB (Telecommunications)
Sport England
Society for Proct' of Ancient Bldgs
English Heritage

OTHERS

.....

.....

.....

.....

.....

.....

NEIGHBOURS

.....

S/N + see map

.....

No pre-apps

Organisation_Name	Building_Name	address1	Old_Postcode
		56BRADMORE WAYREADING	RG6 4DS
		58BRADMORE WAYREADING	RG6 4DS
		10FAKENHAM CLOSEREADING	RG6 4AB
		11FAKENHAM CLOSEREADING	RG6 4AB
		12FAKENHAM CLOSEREADING	RG6 4AB
		14FAKENHAM CLOSEREADING	RG6 4AB
		15FAKENHAM CLOSEREADING	RG6 4AB
		9FAKENHAM CLOSEREADING	RG6 4AB
		6FELTHORPE CLOSEREADING	RG6 4AF
		7FELTHORPE CLOSEREADING	RG6 4AF
		8FELTHORPE CLOSEREADING	RG6 4AF
		9FELTHORPE CLOSEREADING	RG6 4AF
		31BRADMORE WAYREADING	RG6 4DS
		33BRADMORE WAYREADING	RG6 4DS
		35BRADMORE WAYREADING	RG6 4DS
		37BRADMORE WAYREADING	RG6 4DS
		50BRADMORE WAYREADING	RG6 4DS
		52BRADMORE WAYREADING	RG6 4DS
		54BRADMORE WAYREADING	RG6 4DS
		60BRADMORE WAYREADING	RG6 4DS
KWIK SAVE GROUP PLC	UNIT 3	UNIT 3THE SQUAREREADING	RG6 5HJ
B[redacted]KBUSTER VIDEO	UNIT 5	UNIT 5THE SQUAREREADING	RG6 5HJ
FRASER GARAGES	UNIT 1	UNIT 1THE SQUAREREADING	RG6 5HJ
ICELAND FOODS PLC	UNIT 4	UNIT 4THE SQUAREREADING	RG6 5HJ
CULPEPER MILL	UNIT 2	UNIT 2THE SQUAREREADING	RG6 5HJ
LAND ADJOINING KWIK SAVE			

**********FILE COPY**********

Tel: (0118) 974 6445

Date: 13 November 2002

My ref: A/2002/7918

WOKINGHAM UNITARY
Aiming for Excellence

Environmental Services Department
Planning Services
P.O. Box 157
Shute End, Wokingham
Berkshire RG40 1WR
Tel: (0118) 974 6000
Fax: (0118) 974 6484
Minicom No: (0118) 974 6991
DX: 33506 – Wokingham

Councillor A Spratling
18 Moor Copse Close
Earley
RG6 7NA

Dear Councillor

Application Number: A/2002/7918
Land Adjoining Kwiksave, The Square, Chalfont Way, Earley, Reading.
Proposed erection of internally illuminated building signs.

I write to let you know that the above mentioned application has been received.

At this stage a recommendation has not yet been made. This form should only be returned if it is likely that you might wish for the application to be listed for consideration by the Development Control Committee. This form must be received no later than 28 days from the date of this letter.

If you have concerns about the proposals it may be possible for these to be addressed during the consideration of the application. In these circumstances it would be helpful if you could discuss these with the case officer **Angela Odell** on **(0118) 974 6445** in the first instance.

Yours sincerely
Trevor Watson
Development Control Manager

LISTING FORM
Case officer: **Angela Odell** Application Number: **A/2002/7918**
Land Adjoining Kwiksave, The Square, Chalfont Way, Earley, Reading.
Proposed erection of internally illuminated building signs.
I wish this application to be listed should the officers recommendation be for: GRANT/REFUSAL and my reasons are:

_____

_____

Should the officers recommendation be in accordance with my views I am happy for the application to be determined under delegated powers. YES/NO

Signed: _____ Date: _____

Councillor A Spratling

**********FILE COPY**********

**********FILE COPY**********

Tel: (0118) 974 6445

Date: 13 November 2002

My ref: A/2002/7918

WOKINGHAM UNITARY
Aiming for Excellence

Councillor F Rolls
14 Tiptree Close
Earley
RG6 4HS

Environmental Services Department
Planning Services
P.O. Box 157
Shute End, Wokingham
Berkshire RG40 1WR
Tel: (0118) 974 6000
Fax: (0118) 974 6484
Minicom No: (0118) 974 6991
DX: 33506 – Wokingham

Dear Councillor

Application Number: A/2002/7918
Land Adjoining Kwiksave, The Square, Chalfont Way, Earley, Reading.
Proposed erection of internally illuminated building signs.

I write to let you know that the above mentioned application has been received.

At this stage a recommendation has not yet been made. This form should only be returned if it is likely that you might wish for the application to be listed for consideration by the Development Control Committee. This form must be received no later than 28 days from the date of this letter.

If you have concerns about the proposals it may be possible for these to be addressed during the consideration of the application. In these circumstances it would be helpful if you could discuss these with the case officer **Angela Odell** on **(0118) 974 6445** in the first instance.

Yours sincerely
Trevor Watson
Development Control Manager

LISTING FORM
Case officer: **Angela Odell** Application Number: **A/2002/7918**
Land Adjoining Kwiksave, The Square, Chalfont Way, Earley, Reading.
Proposed erection of internally illuminated building signs.
I wish this application to be listed should the officers recommendation be for: GRANT/REFUSAL and my reasons are:

_____

_____

Should the officers recommendation be in accordance with my views I am happy for the application to be determined under delegated powers. YES/NO

Signed: _____ Date: _____

Councillor F Rolls

**********FILE COPY**********

**********FILE COPY**********

Tel: (0118) 974 6445

Date: 13 November 2002

My ref: A/2002/7918

WOKINGHAM UNITARY
Aiming for Excellence

Environmental Services Department
Planning Services
P.O. Box 157
Shute End, Wokingham
Berkshire RG40 1WR
Tel: (0118) 974 6000
Fax: (0118) 974 6484
Minicom No: (0118) 974 6991
DX: 33506 – Wokingham

Councillor D Hare
9 Easby Way
Lower Earley
RG6 3XA

Dear Councillor

Application Number: A/2002/7918
Land Adjoining Kwiksave, The Square, Chalfont Way, Earley, Reading.
Proposed erection of internally illuminated building signs.

I write to let you know that the above mentioned application has been received.

At this stage a recommendation has not yet been made. This form should only be returned if it is likely that you might wish for the application to be listed for consideration by the Development Control Committee. This form must be received no later than 28 days from the date of this letter.

If you have concerns about the proposals it may be possible for these to be addressed during the consideration of the application. In these circumstances it would be helpful if you could discuss these with the case officer **Angela Odell** on **(0118) 974 6445** in the first instance.

Yours sincerely
Trevor Watson
Development Control Manager

LISTING FORM
Case officer: **Angela Odell** Application Number: **A/2002/7918**
Land Adjoining Kwiksave, The Square, Chalfont Way, Earley, Reading.
Proposed erection of internally illuminated building signs.
I wish this application to be listed should the officers recommendation be for: GRANT/REFUSAL and my reasons are:

_____

_____

Should the officers recommendation be in accordance with my views I am happy for the application to be determined under delegated powers. YES/NO

Signed: _____ Date: _____

Councillor D Hare

**********FILE COPY**********

Received by Wokingham District Council

Application No: A/2002/7918

PROPOSAL:
Proposed erection of internally illuminated building signs.

LOCATION:
Land Adjoining Kwiksave, The Square, Chalfont Way, Earley, Reading.

The application is available for inspection at the locations & during the times detailed below:

WOKINGHAM DISTRICT COUNCIL, PLANNING RECEPTION, SHUTE END, WOKINGHAM between 8.30 - 5.00 Monday - Thursday & 8.30 - 4.00 Friday. (TEL: (0118) 974 6428)
OR
WOODLEY LIBRARY, HEADLEY ROAD, WOODLEY between 9.30am - 7.00pm Mon, Thurs & Fri. 9.30am - 5.00pm Tues, 9.30am - 1.00pm Saturday and 1.00pm - 4.00pm Sunday. (closed all day Wednesday). If you intend to view this application at Woodley Library please allow 4 days from the date of this letter for delivery of plans and remember to quote application number A/2002/7918 to enable the library staff to locate the correct information.
OR
EARLEY TOWN COUNCIL, RADSTOCK HOUSE, RADSTOCK LANE, EARLEY between 9.00am – 1.00pm & 2.00pm – 4.30pm Monday to Friday. (TEL: (0118) 986 8995)

Comments should be sent in writing QUOTING THE APPLICATION NUMBER to the Case Officer Angela Odell P.O. Box 157 Council Offices, Shute End, Wokingham Berkshire, RG40 1WR to arrive on or before 07/12/2002. Written comments submitted will become available for public inspection.

In view of the very large number of planning applications and letters of comment received, it will not be possible for an individual reply to be issued to observations made. However any comments will be taken into account when the application is determined and you will be notified of the decision.

Trevor Watson
Development Control Manager
13 November 2002

07.NOV.2002 7913

HEPHER DIXON
TOWN PLANNING CONSULTANTS

01 NOV 2002

F.A.O. Nicola Lake
Head of Planning Services
Planning Services
Wokingham District Council
Civic Offices
Shute End
Wokingham
Berkshire RG40 1BN

PLEASE REPLY TO LONDON

JM/343B/M7001L
31st October 2002

Dear Sirs,

Advertisement Applications, Proposed A3 Drive-Thru' Restaurant
Land Adjoining Kwiksave, The Square, Chalfont Way, Lower Earley, Reading

Please find enclosed three advertisement applications for the proposed drive thru' McDonald's restaurant, The Square, Chalfont Way, Lower Earley. Advertisement consent is sought for the following signs:

1) Low Level Directional Signage

It is proposed to erect a number of low level directional and information signs around the restaurant building and car park area. The majority of signs are non-illuminated directional and parking signs, which under Section 2A of Schedule 3 of the Town and Country Planning (Control of Advertisements) Regulations 1992 have the benefit of deemed advertisement consent. We consider signs 2, 3, 4, 6, 7, 8, 9, 10 and 11 along with the road marking signage as shown on Drawing No. 4786/109/00/1 benefit from deemed advertisement consent. These signs help guide customers safely around the site.

It is proposed to erect a number of internally illuminated menu signs (sign 5) positioned adjacent to the drive-thru' lane which will assist customers in deciding what to order and also improve the overall efficiency of the drive-thru' lane. In addition, it is proposed to erect a number of low level internally illuminated entrance/directional signs (sign 1), comprising a single sided 'Golden Arch' logo and a directional arrow, at the entrance to the retail park, the site and the drive thru' lane (as shown on drawing 4786/109/00/1).

The enclosed forms and drawings are listed at the end of this letter.

100 Temple Chambers
Temple Avenue
London
EC4Y 0HP
Tel - 020 7353 0202
Fax- 020 7353 1818

62 High Street
Stony Stratford
Milton Keynes
MK11 1AQ
Tel - 01908 562 800
Fax- 01908 560 161

Temple Court
Cathedral Road
Cardiff
CF1 1HA
Tel - 029 20 786 623
Fax- 029 20 786 666

Directors
Roger A Hepher BA MTP FRICS MRTPI
Peter G B Dixon MA MRICS MIHT
Christopher Potts BA MRTPI
Duncan N Parr BA DUPI DipTP FRGS MRTPI
E-mail - townplanning@hepherdixon.co.uk
Hepher Dixon Ltd. Registered in England No. 3701328

2) Building Signage

Advertisement consent is sought for the installation of three roof signs (see drawing number 4786/106/01/1). The sign on the front elevation comprises nine individually illuminated letters spelling out McDonald's name including a 'Golden Arch' logo. The signs on the side and drive' thru elevation consist of a 1.2 metre high internally illuminated 'Golden Arch logo.

The enclosed forms and drawings are listed at the end of this letter.

3) Existing Developer's Signage

Advertisement consent is also sought for the inclusion of the McDonald's name within the existing developer's signage as shown on drawing 4786/109/00/1 (sign 12) and drawing 4786/8/01/1. This proposal will only increase the height of the existing sign by 0.35 metres, which will have no adverse effect on the surrounding area but provide motorists using the local highway network a clear indication of the presence of the McDonald's restaurant.

The enclosed forms and drawings are listed at the end of this letter.

In summary, it is considered that the proposed signs relate well to the restaurant itself and its surrounding commercial area, both in terms of scale and positioning. We consider that the signs would not have a detrimental impact on the visual amenity of the locality and will ensure that the entrance to the restaurant is clearly visible to motorists travelling on the surrounding highway network.

We trust that the enclosed is in order if you should require any further information or clarification on any issue raised in this letter then please do not hesitate to contact either David Maddox or myself at this office.

Yours faithfully,

Jonathan Murch
Planning Assistant

Enc: 1) **Low Level Directional Signage**
Site Layout - Customer Journey Signage (Drawing Number 4786/109/00/1)
Detailed Signage Sheets
Application Forms
Site Location Plan

2) **Building Signage**
Site Layout - Customer Journey Signage (Drawing Number 4786/109/00/1)
Elevations (Drawing Number 4786/106/01/1)
Application Forms
Signage sheets
Site Location Plan

3) **Existing Developer's Signage**
Site Layout - Customer Journey Signage (Drawing Number 4786/109/00/1)
Proposed Site Signage Alteration (Drawing Number 4786/8/01/1)
Application Forms
Site Location Plan

Fee of £180

c.c. J. O' Connor, McDonald's Restaurants (without enclosures)
E. Weintroub, McDonald's Restaurants (without enclosures)
R. O'Neill, McDonald's Restaurants (without enclosures)
D. Kotecha, Lewis & Hickey (without enclosures)
N. Thorne, NLJCT (without enclosures)
C. Potts, Hepher Dixon (without enclosures)

1782/a

01.NOV.2002 7918

7918

You are advised to read the accompanying notes before completing any part of this form.

APPLICATION FOR CONSENT TO DISPLAY AN ADVERTISEMENT

01 NOV 2002

Town and Country Planning Act 1990 (Schedule 2 to the 1989 Regulations)

The Town and Country Planning (Consent to Display Advertisements) Amendment Regulations 1993. All documents to be submitted in quadruplicate.

Completed copies of this form and the drawing specified overleaf (see Note 3) should be sent to:-
Wokingham District Council, Planning Department, PO Box No. 157, Civic Offices, Shute End, Wokingham, Berkshire, RG40 1WR.

1. APPLICANT (Block capitals please)
Full Name: McDONALDS RESTAURANTS
Address: C/O AGENT
Post Code
Tel. No.

2. AGENT (if any) (Block capitals please)
Full Name HEPHER DIXON
Address: 100 TEMPLE CHAMBERS, TEMPLE AVENUE, LONDON Post Code EC4Y 0HP
Tel. No. 02073530202

3. Full postal address or location of the land on which the advertisement is to be displayed. LAND ADJOINING KWIK SAVE, CHALFONT WAY, LOWER EARLEY

4. State the purpose for which the land or building is now used. VACANT

5. (a) Has the applicant an interest in the land?
LESEE **YES / NO ***
(b) If **NO**, has the permission of the owner, or of any other person entitled to give permission for the display of the advertisement, been obtained?
(See Note 4) **YES / NO ***

6. (a) State the nature of the advertisement (e.g. hoarding, shop sign, projecting sign, etc.)
BUILDING SIGNAGE
(b) Is the advertisement already being displayed?
~~YES~~ / NO *

7. (a) Will the advertisement be illuminated?
PLEASE SEE COVERING LETTER **YES / NO ***
(b) If **YES**, state the type of illumination (e.g. internally, externally, floodlighting, etc.)
(c) Will the illumination be static or intermittent?

8. Period for which consent is sought (See Note 2).
5 YEARS

9. Any additional information which you may wish to supply.

*** Delete as appropriate**

I enclose a cheque or money order for the appropriate fee (See Note 6) of £ 60

Signed HEPHER DIXON
~~(applicant/~~agent)

Date 31st October 2002

DATA PROTECTION ACT 1984
'Information contained in this form is likely to be personal data within the terms of the Data Protection Act 1984, and as such will be held by the Council on computer (such as the PLANAPS applications processing system) and may be used by the Council only for purposes registered under the terms of the Data Protection Act.'

NOTES

GENERAL

1. Under the Town and Country Planning (Control of Advertisements) Regulations 1989, many outdoor advertisements required "express consent" from the local planning authority (usually the district council) before they can be lawfully displayed. Applicants should refer to the Regulations for details.

Period of Consent

2. Normally the maximum period for which the Council will grant consent is 5 years; but they have discretion to grant consent for a longer period. If consent is required for a specific period of more or less than 5 years, this requirement should be stated in reply to Question 8 on the application form.

Drawing Required

3. The drawing of the proposed advertisement can be in black and white on paper. It should show the size of the advertisement and its position on the land or the building in question. For a sign, the drawing should indicate the materials to be used, fixings, colours, height above the ground and, where it would project from a building, the extent of the projection.

   The drawings should include a 1:2500 scale location plan showing the site edged in *RED*. All drawings should be submitted in quadruplicate.

Owner's Consent

4. It is a condition of every consent granted by or under the Regulations that, before displaying the advertisement for which consent is given, the permission of the owner of the land or other person entitled to grant permission shall be obtained.

Other Consents

5. A grant of consent under the Town and Country Planning (Control of Advertisements) Regulation 1989 does not rank as consent which may be required for any other purpose, e.g. 'listed building consent' where the advertisement is to be displayed on any listed building.

Fees for Advertisement Applications

6. Regulation 11 of the Town and Country Planning (Fees for Applications and Deemed Applications) Regulations 1997 requires a fee to be paid to the Council with the advertisement application. The fee is related to each site on which it is proposed to display one or more advertisements. The appropriate fee for the following categories of advertisement is:-

   1. Advertisements displayed on business premises, on the forecourt of business premises or on other land within the curtilage of business premises, wholly with reference to all or any of the following matters:- **£50.00**

      (a) the nature of the business or other activity carried on on the premises:
      (b) the goods sold or the services provided on the premises; or
      (c) the name and qualifications of the person carrying on such business or activity or supplying such goods or services.

   2. Advertisements for the purpose of directing members of the public to, or otherwise drawing attention to the existence of, business premises which are in the same locality as the site on which the advertisement is to be displayed but which are not visible from that site. **£50.00**

   3. All other advertisements. **£190.00**

THE FOLLOWING SCANNED IMAGES ARE DOCUMENTS OF BAD QUALITY OR ARE PHOTOCOPIES.

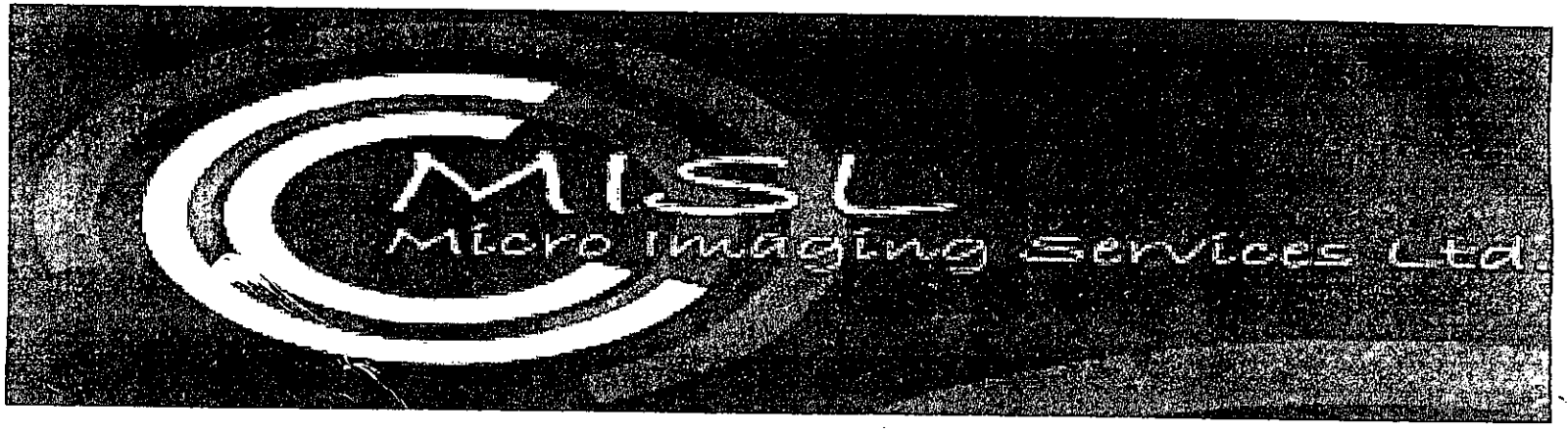

FOR THIS REASON THEY MAY APPEAR UNREADABLE ON SCREEN

(1) 3 CHALFONT SQUARE, CHALFONT WAY

ADDRESS PARISH LOWER EARLEY

PLOT No. AREA 20 KWIKSAVE ORD. SHEET No. 66

BUILDER

Plan No.	Applicant	Description of Development	Date of Decision	Decision
01945	LOWER EARLEY PARISH COUNCIL	PLAN		C/A
39070	W/DR.			
41675	CENTROS PROPS/PAYROLL SECURITIES	REDBILL STORE	25-2-94	C/A LA
FP94/2604	"	S/S. PORTAL FRAME BLDG.	15-7-94	APP
43243	KWIKSAVE GROUP plc.	NON-ILL. DEV. BOARD	28-9-94	REF
43572	"	ILL. SIGNS	29.11.94	C/A
FP94/3121	"	INT. SHOPFITTING	23-11-94	APP
95/63064/F	CENTROS PROPS	SEE 1 FOR DETAILS	15-1-96	C/A
FP/2000/0695	Lewis & Hickley	New drive thru' restaurant	14.6.00	APP
F/2000/1998	LIDL U.K	Newshopfr, canopy, & cladding	11.09.00	C/A
F/2000/1503	McDonalds	Erect A3 drive thru' restaurant		
A/2000/2168	"	Erect illuminated sign	29.11.00	C/A
A/2000/2167	"	" " "	29.11.00	C/A

MINISTRY DECISION

SPECIAL ORDERS

1933 (2) 3 CHALFONT SQUARE

ADDRESS CHALFONT WAY PARISH LOWER EARLEY

PLOT No KWIKSAVE ORD. SHEET No. 66

F/2000/1504 McDonalds Erect A3 drive thru rest. (dup. app) (LAND ADJ.) 8.8.02 C/A

BUILDER

Plan No. F/2000/1503	Applicant "	Description of Development " (LAND ADJ)	Date of Decision 8.8.02	Decision C/A
A/2000/2169	McDonalds			
A/2000/2170	"	Erect. of int illum roof sign	04.01.01	C/A
A/2000/2192	LIDL UK	Erect of int illum sign	23.03.01	C/A
F/2002/7859	McDonalds	Erect drive thru restaurant Amendment to 1503		
A/2002/7917	McDonalds	illum + non illum sign		
A/2002/7918	"	internally illum sign		
A/2002/7919	"	Erect new dev. sign		

MINISTRY DECISION

SPECIAL ORDERS

STORE FRONT FASCIA LETTERS AND ARCH

25 NOV 2002

STORE FRONT FASCIA LETTERS AND ARCH

MOULDED YELLOW GOLDEN ARCH AND MOULDED OPAL MCDONALDS TEXT.

CONSTRUCTED AS INDIVIDUAL LETTERS ONTO BLACK SUPPORT BEAM.

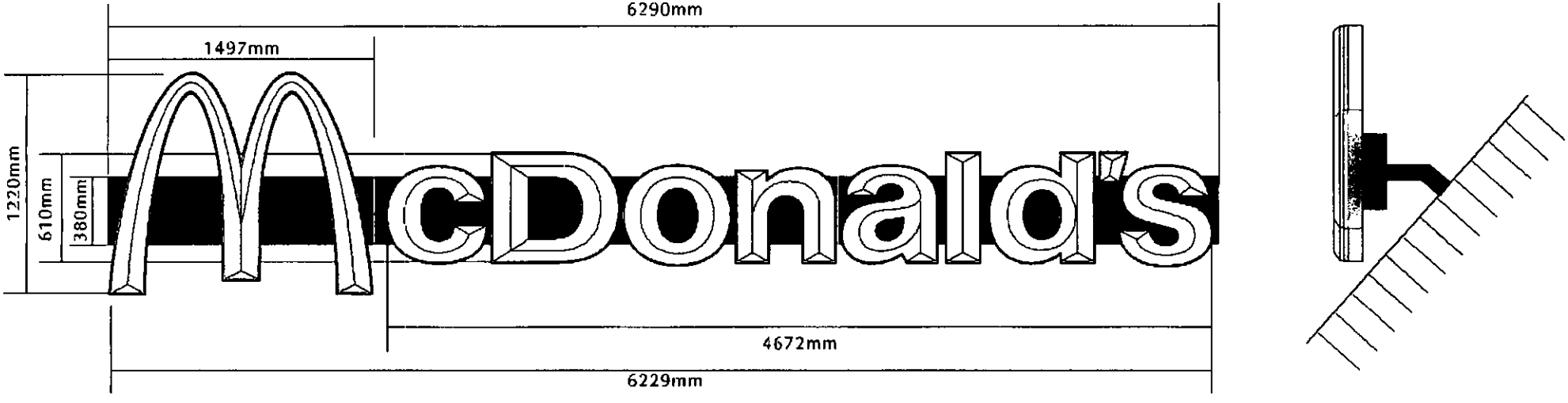

174 SUNBRIDGE ROAD, BRADFORD, WEST YORKSHIRE. BD1 2RZ. Tel : +44 (0) 1274 722244 Fax : +44 (0) 1274 848998 - www.butterfieldsigns.co.uk

PLANNING SERVICES	
FOL	TLS
DC	
APP	
CS	
25 NOV 2002	
COPIES TO	

STORE FRONT FASCIA LETTERS AND ARCH

STORE FRONT FASCIA LETTERS AND ARCH

MOULDED YELLOW GOLDEN ARCH AND MOULDED OPAL MCDONALDS TEXT.

CONSTRUCTED AS INDIVIDUAL LETTERS ONTO BLACK SUPPORT BEAM.

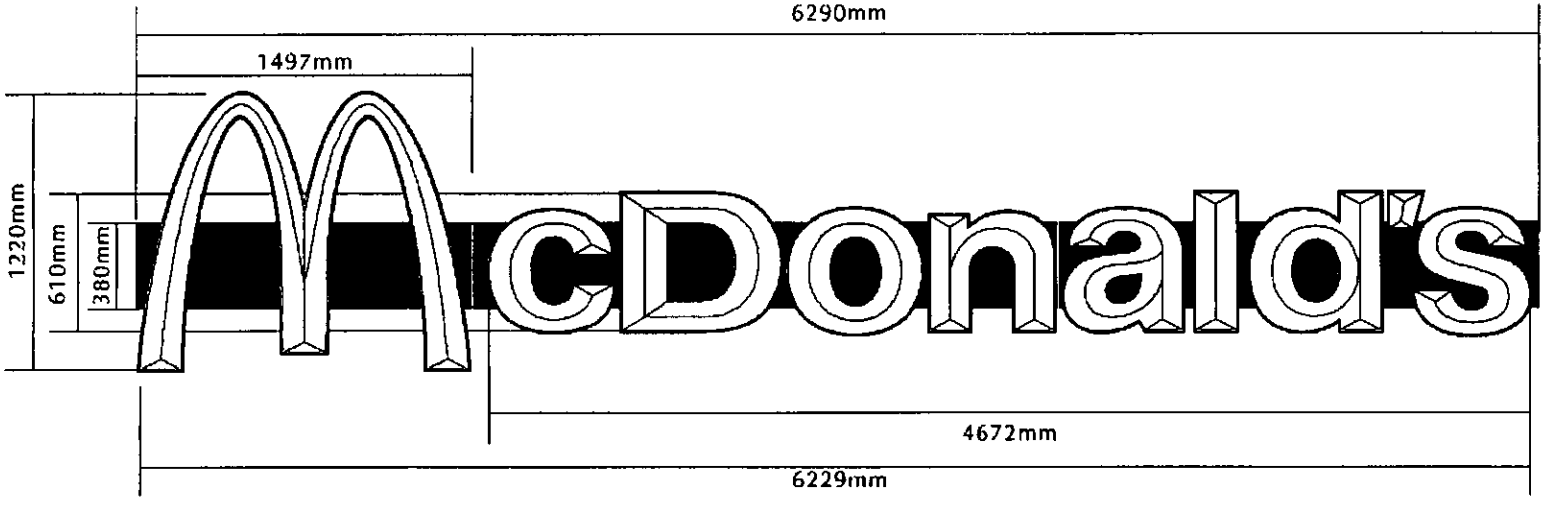

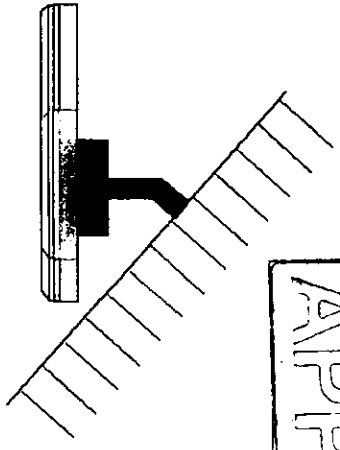

APPROVED

174 SUNBRIDGE ROAD, BRADFORD, WEST YORKSHIRE. BD1 2RZ. Tel : +44 (0) 1274 722244 Fax : +44 (0) 1274 848998 - www.butterfieldsigns.co.uk

ROOF MOUNTED ARCH

ROOF MOUNTED ARCH

MOULDED YELLOW GOLDEN ARCH CONSTRUCTED AS INDIVIDUAL LETTERS ONTO BLACK SUPPORT BEAM.

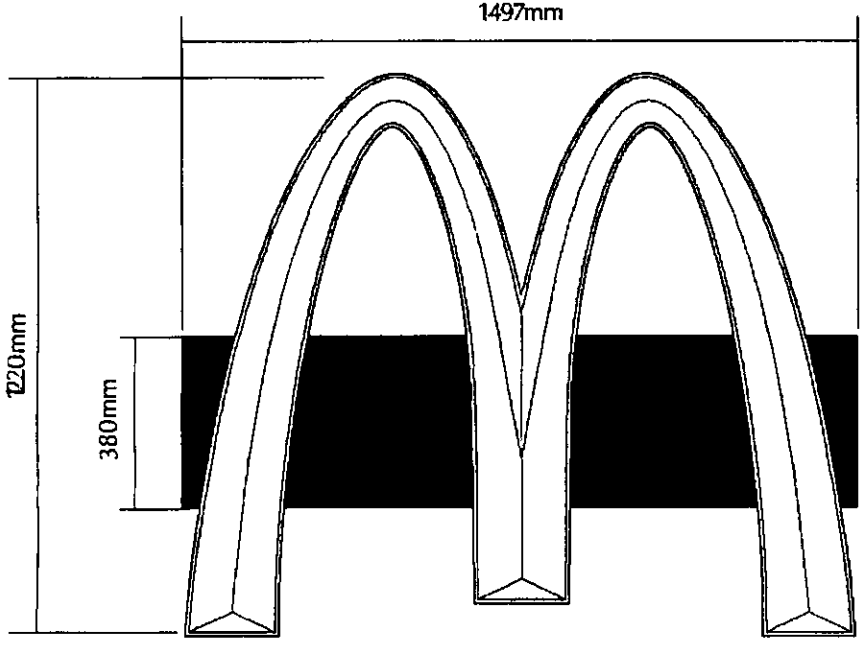

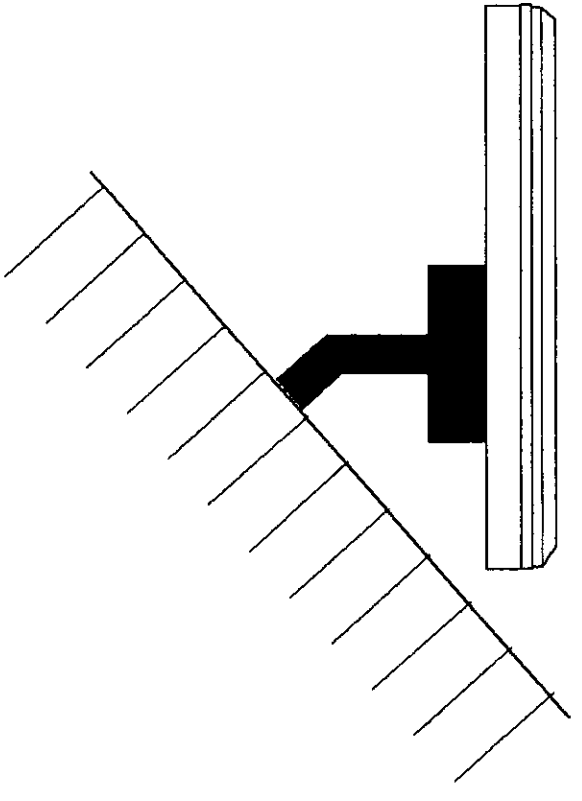

APPROVED

174 SUNBRIDGE ROAD, BRADFORD, WEST YORKSHIRE. BD1 2RZ. Tel : +44 (0) 1274 722244 Fax : +44 (0) 1274 848998 - www.butterfieldsigns.co.uk

ADDITIONAL NEIGHBOUR CONSULTATION SHEET

APPLICATION NUMBER: A/2002/7918
CASE OFFICER: Angela Odell

ADDRESS OF ADDITIONAL NEIGHBOUR CONSULTATION	NUMBER OF DAYS FOR RESPONSE	DATE LETTER ISSUED (for Admin use)